# COUNCIL MEETING AGENDA

Regular Meeting of the Council of the Village of Rycroft held in the Village Office at 6:30 pm, Tuesday July 16, 2019.

1. Call to Order
2. Adoption of Agenda
3. Adoption of Previous Meeting Minutes
   - 3.1. Minutes from the June 18, 2019 Regular Council Meeting
4. Public Hearings
5. Delegations
   - 5.1. 6:30 p.m. Steve Everitt RE: Rycroft Municipal Library Six Month Report
   - 5.2. 6:45 p.m. Dan Dibbelt RE: Economic Development Assessment
6. CAO Report
   - 6.1. CAO Report, Public Works Department Report, Action Item List, Calendar, Council Strategic Priorities Chart
7. Councillor Reports
   - 7.1. Councillor Chelick Written Report
8. Previous Business
9. New Business
   - 9.1. Financial Update Report to June 30, 2019
   - 9.2. Royal Canadian Legion RE: Ad in Military Service Book
   - 9.3. Spirit River Kinettes RE: Request for Donation to Golf Tournament Sept. 7/19 Chinook Valley
   - 9.4. Parent Link Rental Space
   - 9.5. RFD: Central Peace Intermunicipal Subdivision and Development Appeal Board Bylaw and Agreement
   - 9.6. RFD: Policy Review
     a) LEG.01 Council Duties
     b) LEG.02 Conduct of Business by Resolution or Bylaw
     c) LEG.03 Duties of Mayor
     d) LEG.05 Councillors Tax Exemption
     e) LIB.01 Library
     f) LEG.01 Responsibility of Councillors Appointed to Committees, Boards, or Authorities (new number)
   - 9.7. Saddle Hills County RE: Economic Disaster Resilience & Recovery Workshop July 22/19

10. Correspondence Items

10.1. Central Peace Fire and Rescue Commission Fire Chief report to June 26, 2019

10.2. G5 General Meeting Notes from June 25, 2019

10.3. Water North Coalition Advisory of Meeting July 25, 2019 at Kakut Lake

10.4. Central Peace Regional Emergency Management Committee Meeting Agenda July 18, 2019 Birch Hills County

10.5. Friends of the Rycroft Community Hall Meeting Minutes June 19, 2019

11. In Camera

11.1. Personnel Issue

12. Adjournment

# MEETING MINUTES
# VILLAGE OF RYCROFT
# REGULAR COUNCIL MEETING
# JUNE 18, 2019
# VILLAGE OF RYCROFT COUNCIL CHAMBERS

| | | |
|---|---|---|
| **PRESENT:** | **Diahann Potrebenko** | **Mayor** |
| | **James Verquin** | **Deputy Mayor** |
| | **Joanne Chelick** | **Councillor** |
| | **Roxann Dreger** | **Councillor** |
| | **Peter Thomas** | **Chief Administrative Officer** |
| | **Lisa Shaykowski** | **Finance Clerk** |
| **ABSENT:** | **Dwayne Kotyk** | **Councillor** |

1. **CALL TO ORDER**

Mayor Potrebenko called the meeting to order at 6:30 p.m.

Doug Sinclair from Ritchie Bros. Auctions joined the meeting at 6:30 p.m.

2. **ADOPTION OF AGENDA**

2019-6-18-166 **MOVED** by Councillor Dreger that Council approve the Village of Rycroft regular Council meeting agenda dated June 18, 2019 with the following amendments:

**ADD:** **11.2** Personnel: CAO Evaluation **CARRIED**

3. **ADOPTION OF PREVIOUS MEETING MINUTES**

**3.1 Minutes from the June 5, 2019 Regular Council Meeting**

2019-6-18-167 **MOVED** by Deputy Mayor Verquin that Council approve the June 5, 2019 regular Council meeting minutes as presented. **CARRIED**

4. **PUBLIC HEARINGS**

5. **DELEGATIONS**

**5.1 Doug Sinclair, Territory Manager Ritchie Bros. Auctioneers RE: Industrial Lots**

Doug Sinclair, Territory Manager Ritchie Bros. Auctioneers made a presentation to Council reviewing the option of selling the Village Industrial lots through a reserved auction.

Doug Sinclair left the meeting at 6:52 p.m.

2019-6-18-168 **MOVED** by Mayor Potrebenko that Council direct administration to enter into an agreement with Ritchie Bros. Auctions to sell lots 5 and 8 (Plan 8922532, 15-78-6-W6) located in the Crossroads Industrial Subdivision at a reserved auction with a listing price of fair market value plus costs. **CARRIED**

## 6. CAO REPORT

### 6.1 CAO Report, Action Item List, Calendar, Council Strategic Priorities Chart

2019-6-18-169 **MOVED** by Councillor Chelick that Council cancel the regular Council meetings scheduled for July 3 and August 7. **CARRIED**

2019-6-18-170 **MOVED** by Deputy Mayor Verquin that Council accept the CAO Report, Action Item List, Calendar, and Council Strategic Priorities Chart as presented. **CARRIED**

## 7. COUNCILLOR REPORTS

### 7.1 Councillor Chelick Written Report

June 12 CP Retention and Attraction Committee Meeting

**Councillor Dreger**

June 18 CP Health and Wellness Coalition Meeting

**Mayor Potrebenko**

June 11 G5 Seniors' Housing Committee Meeting
June 17 G5 Economic Development Committee Meeting

2019-6-18-171 **MOVED** by Deputy Mayor Verquin that Council approve the Council member reports as presented. **CARRIED**

## 8. PREVIOUS BUSINESS

### 8.1 RFD: Mailing Utility Billing Costs

2019-6-18-172 **MOVED** by Deputy Mayor Verquin that Council direct Administration to continue the practice of encouraging users to receive their monthly utility billing by email. **CARRIED**

### 8.2 RFD: John Deere Backhoe Repairs

2019-6-18-173 **MOVED** by Deputy Mayor Verquin that Council receive the information on the John Deere Backhoe repairs for information. **CARRIED**

## 9. NEW BUSINESS

### 9.1 RFD: Baseball Diamonds Maintenance Grant request

2019-6-18-174 **MOVED** by Deputy Mayor Verquin that Council approve a $1,000 operating grant to the Rycroft Baseball Association for maintaining the 3 ball diamonds in Rycroft used by minor ball, slo-pitch, the senior league baseball team, and the general public.

**CARRIED**

### 9.2 Rycroft Ag. Society RE: Request for Support for Race the 8 Chuckwagon Races

2019-6-18-175 **MOVED** by Deputy Mayor Verquin that Council provide a grant of $3,200 to support the Race the 8 Chuckwagon Races held at the Rycroft Ag. Grounds, with advertising costs, and the purchase of a bicycle for the calf chase event.

**CARRIED**

### 9.3 Letter From Property Owner RE: Cannabis Production Facility in the Industrial Park

2019-6-18-176 **MOVED** by Mayor Potrebenko that Council direct Administration to create a reply letter regarding the request to locate a cannabis production facility in the M1 Industrial district, identifying that Council will be considering the topic of cannabis production and retail locations in the amendment of the Land Use Bylaw, and the M1 district is an area that Council would consider allowing that land use, subject to a public hearing and Council final approval of the updated bylaw, that is due in the fall of this year.

**CARRIED**

### 9.4 Draft G5 General Meeting Agenda June 25 at the Rycroft Hall

2019-6-18-177 **MOVED** by Councillor Chelick that Council accept the draft G5 General Meeting Agenda June 25 at the Rycroft Hall as presented. **CARRIED**

Mayor Potrebenko, and Councillors Chelick and Dreger indicated they plan to attend the meeting.

### 9.5 G5 Seniors Housing Committee Meeting Minutes June 11, 2019

Mayor Potrebenko indicated that Saddle Hills County will support the Village of Rycroft with their financial contribution to the Seniors Housing project in the Town of Spirit River, and motions need to be made by the G5 partners to move the project forward.

2019-6-18-178 **MOVED** by Councillor Chelick that Council approve the following cost-sharing formula for the land acquisition/preparation (Plan 0929318, Block 1, Lot 2 and 3, and Part NW Section 22 Township 78 Range 6 W6M, civic address 4303-52 Street, located in the Town of Spirit River) for the seniors' supportive living facility as follows:

- MD of Spirit River - $350,000

- Birch Hills County - $100,000
- Saddle Hills County - $150,000
- Village of Rycroft - $100,000
- Town of Spirit River - $100,000;

**AND THAT** the land title is transferred into the names of the five municipalities.
**CARRIED**

**2019-6-18-179** **MOVED** by Councillor Chelick that Council approve the transfer of the lands (Plan 0929318 Block 1 Lot 2 and Lot 3, and Part NW Section 22 Township 78 Range 6 W6M, civic address 4303-52 Street, located in the Town of Spirit River) to the Grande Spirit Foundation for $1.00 prior to commencement of construction for the seniors' supportive living facility as approved and announced by the Alberta provincial government on March 7, 2019. **CARRIED**

**2019-6-18-180** **MOVED** by Councillor Chelick that appoint the MD of Spirit River as the managing partner municipality for the land (Plan 0929318 Block 1 Lot 2 and Lot 3, and Part NW Section 22 Township 78 Range 6 W6M, civic address 4303-52 Street, located in the Town of Spirit River) and the preparation work, Environmental Assessments, and handing land title transfers related to the seniors' supportive living facility.
**CARRIED**

**9.6. RFD: Policy Review**

**a) ADM.13 Community Hall Rental**
**b) ADM.04 Burning**
**c) FIN.01 Tangible Capital Asset**
**d) FIN.02 Tax Installment Payment Plan**
**e) GEN.01 Municipal Owned Properties**
**f) EM.01 Central Peace Regional Emergency Management (2009)**
**g) HR.02 Job Descriptions**
**h) HR.03 Employee Conduct**

**2019-6-18-181** **MOVED** by Councillor Chelick that Council approve the updated policies ADM.13 Community Hall Rental; ADM.04 Burning; FIN.01 Tangible Capital Asset; and FIN.02 Tax Installment Payment Plan as presented;
**AND THAT** Council delete policies GEN.01 Municipal Owned Properties; EM.01 Central Peace Regional Emergency Management (2009); HR.02 Job Descriptions; and HR.03 Employee Conduct **CARRIED**

## 10. CORRESPONDENCE ITEMS

**10.1 CN Celebrates 100 Years**

**2019-6-18-182** **MOVED** by Councillor Chelick that Council accept information item 10.1 CN Celebrates 100 Years for information. **CARRIED**

## 11. IN CAMERA

**2019-6-18-183** **MOVED** by Councillor Chelick that Council move to an in camera meeting to review a legal and personnel issue (CAO Performance Appraisal) at 8:16 p.m.
**CARRIED**

**2019-6-18-184** **MOVED** by Mayor Potrebenko that Council come out of the in camera meeting at 8:26 p.m.
**CARRIED**

## 12. ADJOURNMENT

Mayor Potrebenko adjourned the meeting at 8:26 p.m.

**Diahann Potrebenko**
**Mayor**

**Peter Thomas**
**Chief Administrative Officer**

# Rycroft Municipal Library Six Month Report

January we ran a successful bottle drive.

We also now have two small cream coloured recycle bins, one located at the Village's recycle area and one at the Nardam Lake Campground. Signage on them both to recycle in support of the library.

The library hosted regular monthly programs and events such as a Games Night, Lego @ The Library, Family History Group and a Movie Matinee, our Facebook page had the details. Stopped for the months of July & August but will return in September. Lego @ The Library is still going because of its popularity. Along with this holidays such as Valentine's Day the library usually had a program and also ran a Story Time supported by CPECC (Central Peace Early Childhood Coalition). Story Time will return in the fall.

We have had three Movie Matinee's so far on the last Sunday of Mar/Apr/May. Will start again in September.

In April the board was invited to be security at the Platinum North Breakup Dance and received a generous donation from them as a result.

In May we ran a successful Crystals & Wine Event at the library.

In June we teamed up with CPECC (Central Peace Early Childhood Coalition)and CPHAWC (Central Peace Health & Wellness Coalition) for a Get Out & Play Event with a BBQ.

## Future Events & Plans

**Events:**

Summer Reading program has begun.
We are coordinating a book fair event with the Rycroft School.
BBQ/Membership Drive/Meet The Board fundraiser.
Magic The Gathering event.

**Plans:**

Increase our movie options, Friday Night Flicks for adults perhaps. (The Sunday Movie Matinee's tend to be more geared to the younger ones).
A classic movie afternoon that may interest our seniors and encourage the Merry Pioneer group to visit the library.
A gardening club.
Geocache at the library.

5.2

# ECONOMIC DEVELOPMENT ASSESSMENT
# VILLAGE OF RYCROFT, ALBERTA

Dibbelt Northern Development Services

June 2019

## Table of Contents

**Executive Highlights**

**Background.....3**

**Section2 Population, Traffic Counts, and Mils Rates.....4**

**Section 3 Descriptive Overview of The Village of Rycroft..... 13**

**Section 4 Selling the Village of Rycroft.....15**

**Section 5 Industry Site Locators..... 17**

**Section 6 Economic Development Opportunities..... 19**

**Section 7 Other Considerations.....22**

**Section 8 Closing Comments and Recommendations.....25**

**Appendices.....28**

A Central Peace Population Chart

B Traffic Flow Schematic

C Mil Rates and Debt Limits in the Peace Region

D Retail Trade Profile – Central Peace

E Property Tax Incentives – GOA Q&A Sheet

F Entrepreneurial Grants

G Community Beautification Contest

H Alberta Exports 2018

I Economic Development Committee Parameters

**Executive Highlights**

Economic Development is the practice of selling your community to a potential buyer. The community is a commodity, hopefully one that someone wants to invest in. The buyer is a business, developer, or investor that is looking for a community to set up in.

**1)** First and foremost, the Village of Rycroft needs to target its economic development efforts to those areas most likely to be successful. For example, most small urbans lament the loss of a vibrant retail downtown. This is unfortunately a result of a number of factors such as the increase in online shopping, improvements in transportation, and outdated downtown buildings. But it does not mean the downtown area can't be re-conceptualized and re-purposed with a strategic vision and purpose guiding your Council decisions.

**2)** In order to successfully sell itself Rycroft must think of itself as the commodity for sale and then a number of factors need to be in place: A) you must have something that makes you stand out from the crowd to the buyer; B) there is market demand for what you are selling; C) you have available land, properties, housing, labour, water, utilities, etc ... the checklist of items a business, developer, investor needs to set-up in your community.

**3)** Also, Internal administrative processes need to be in place and these processes need to be development friendly. For example, land-use by laws need to be in alignment, "one-stop" packages with all the information needed to accept development and business applications; and next steps follow-up that engages the potential newcomer.

**4)** Property taxes and mil rates can be used as an economic advantage. The various levels of mil rates across the Peace Region can place one municipality ahead of another in the final decision of developers and investors.

**5)** Rycroft's biggest advantage is its location. At the juncture of Hwy 2 and Hwy 49; the average daily traffic that crosses that intersection on any given day is 8000+. Also, Rycroft's access to the CN rail-line is another advantage. These advantages can mitigate things like a higher mil rate depending on the needs of the developer / investor.

**6)** Esthetics. Plain and simple, people want to live in an attractive and well-maintained community.

**7)** This report recommends the Village of Rycroft focus on three areas of economic development:

A. Downtown re-visioning incorporating local entrepreneurs,

B. Highway frontage, high-value commercial products & services,

C. Value-added agricultural developments and high-value agricultural services

## Section 1 Background

In February of 2019, CAO, Peter Thomas approached the Peace Region Economic Development Alliance (PREDA) to review options for economic development opportunities for the Village of Rycroft. PREDA reviewed grant options to initially assist the Village, resulting in ultimately securing $16K for this report from a partnership among PREDA ($4000), GOA CARES ($8000), and the Village ($4000). A four-month timeline was set for the report - March 2019 to June 2019.

There are four primary purposes for conducting an economic development assessment:

1. To build consensus and understanding amongst and with Council and administration on the direction they wish the municipality to go economically;
2. To work together in establishing an economic vision for the community that is internally supported through appropriate by-laws, land-use clarification, processes and priorities for Council and administration to focus on achieving that vision;
3. To create and implement a follow-up action plan that incorporates the information collected in the economic development assessment;
4. And finally, to encourage growth in your community hence increasing your community's tax base and viability.

The Alberta Municipal Government Act states the primary purposes of a municipality is to: 1) provide good government; 2) provide services, facilities or other things that, in the opinion of Council, are necessary or desirable for all or part of the municipality; and 3) develop and maintain safe and viable communities.

In April 2015, electors of the Village of Rycroft petitioned the Minister of Municipal Affairs to conduct a viability review. A viability review addresses a municipality's governance, finances, and infrastructure to determine whether changes are required for the community to remain viable. A viability review may result in dissolution, whereby a municipality is no longer a separate legal entity and becomes a part of its neighbouring municipality. A viability review team for the Village of Rycroft was established in 2015 to review and recommend whether the Village was viable, and to develop a plan to address identified risk to the long-term viability of the Village. The review included consultation with Village residents and businesses.

In 2017, ratepayers of the Village of Rycroft voted in favor of remaining a Village. Subsequently the Government of Alberta Municipal Affairs released their viability review. One of the highlights identified in the viability was that the Village had seen considerable turnover in staff and Council members; thus, creating an unstable environment for attracting development to a community. Additionally, Alberta Municipal Affairs in their viability review included a list of actions the Village must undertake to remain viable. The Council and administration have been working on the recommendations and have included the need to pursue economic development options as a priority.

## Section 2 Population, Traffic Counts, and Mils Rates

**A) Population Profile**: This data gives you a snapshot of who lives in your community. The data can be invaluable when determining the programs and services that the municipality will invest in and offer to its residents. The diagram below shows the most current population spread of the Village of Rycroft – male vs. female and by age clusters of 4 years apart.

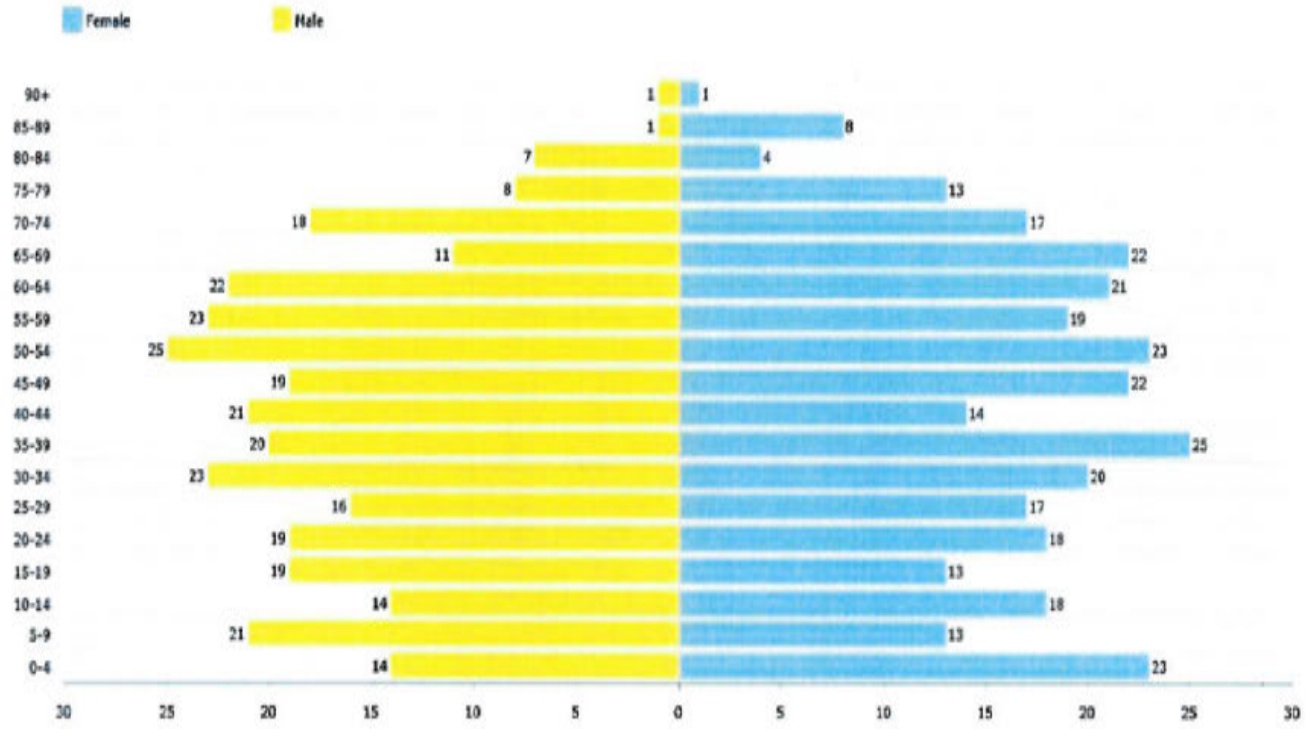


The raw data used to create this diagram is presented in the next table. For economic development purposes it is helpful to view population data with a "business opportunity lens". Descriptors such as gender, single parent families, married vs. unmarried, the number of seniors living alone, etc... can add a deeper knowledge of certain age-clusters. For example, having a large pool of females, married, with children would be a good target market for yoga classes or paint nights. At the civic responsibility level, knowing how many of your older seniors are living alone can streamline your emergency response team during a power outage, a severe snowstorm, or an evacuation. For comparative purposes, a listing of the population data for all of the Central Peace is provided in Appendix A.

| Rycroft, Village Statistics Canada – 2016 Census | | | |
|---|---|---|---|
| Population; 2016 | 612 | | |
| Population; 2011 | 628 | | |
| **Population - Age Groups** | **Total** | **M** | **F** |
| 0 to 4 years | 40 | 15 | 25 |
| 5 to 9 years | 35 | 25 | 15 |
| 10 to 14 years | 35 | 15 | 15 |
| 15 to 19 years | 35 | 20 | 10 |
| 20 to 24 years | 35 | 20 | 20 |
| 25 to 29 years | 35 | 15 | 15 |
| 30 to 34 years | 45 | 25 | 20 |
| 35 to 39 years | 45 | 20 | 20 |
| 40 to 44 years | 35 | 20 | 15 |
| 45 to 49 years | 40 | 20 | 20 |
| 50 to 54 years | 55 | 25 | 25 |
| 55 to 59 years | 40 | 20 | 20 |
| 60 to 64 years | 45 | 25 | 20 |
| 65 to 69 years | 30 | 10 | 25 |
| 70 to 74 years | 30 | 15 | 15 |
| 75 to 79 years | 20 | 10 | 15 |
| 80 to 84 years | 10 | 5 | 0 |
| 85 to 89 years | 10 | 0 | 10 |
| 90 to 94 years | 0 | 0 | 0 |
| 95 to 99 years | 0 | 0 | 0 |
| 100 + years | 0 | 0 | 0 |
| Average age | 41.2 | 40.2 | 42 |
| Married / Common | 295 | 150 | 145 |
| Average size families | 2.8 | | |
| lone-parent families | 25 | | |
| English only | 590 | 295 | 300 |

As previously noted, knowing the profile of your community can help identify where municipal resources can be best allocated for programs and services. The following cluster descriptions indicate typical life phases for each group and the types of services and programs frequently offered through municipalities and community stakeholders.

0-4 Years: Pre-schoolers. Benefit from programs such as Moms & Tots, breastfeeding clinics, immunizations, Swim & Gym, etc. This age group is also a fore-teller of the upcoming demand for daycare and kindergarten.

5 to 14: School age youth. Benefit from after-school programs, school sport sponsorships, etc.

15 to 19: Highschool or recent graduates. Benefit from student employment programs, facilitation of post-secondary information sessions, safe socials, etc. This group is also, the youngest pool of your labour force.

20 to 24 years: The group most likely to leave your community in pursuit of new adventures like college. Municipal post-secondary scholarships and internships benefit this group.

25 to 44 years: Parents. Frequently volunteer for activities involving their children.

45 to 64 years: Grandparents. Increased travel, more leisure time. Tends to actively support / volunteer for community level activities such as Festival of Trees, Ducks Unlimited, Municipal Councils, (i.e.... non-child related). Some may be taking care of their parents.

65 to 100+ years: Seniors. With each passing decade the need for assistance increases. Seniors services such as snow removal, safe-home health checks, and housekeeping can help a senior stay longer in their home. As seniors age the need for long-term care, and health care visits increases.

As previously noted, other profile descriptors such as gender, single parent families, married vs. unmarried, the number of seniors living alone, etc.... can add a deeper knowledge of certain age-clusters.

**B) Dwelling Counts:**

| Dwelling Counts | Rycroft | Birch Hills | Spirit River. MD | Spirit River, Town | Saddle Hills |
|---|---|---|---|---|---|
| Total private dwellings | 316 | 616 | 306 | 487 | 978 |
| Occupied private dwellings | 275 | 495 | 275 | 445 | 840 |
| Owner (vs Rental) | 65% | 84% | 100% | 79% | 90% |
| Occupancy / Vacancy Rate | 87% / 13% | 80% / 20% | 89% / 11% | 91% / 9% | 85% / 15% |

The table above shows the dwelling counts for the municipalities in the Central Peace. Of the total number (316) of private dwellings recorded in Rycroft 275 were occupied. Knowing this one can easily calculate the vacancy rates for the community. Vacancy rates are frequently reviewed by potential newcomers / business investors as they (or their staff) need a place to live. However, vacancy rates can be deceptive. For example, perhaps the vacancies are derelict. Having an intimate knowledge of the available housing in your community can only be achieved by walking around your town and checking the property details with your administration.

Another metric shown in the table above is the percent of the occupied dwellings that are owned (vs rentals). Note that for Rycroft, home ownership is significantly less than the rural municipalities. This is not uncommon in northern small urbans. Rural ownership frequently includes land which requires much more commitment (and most likely generational ownership). One of the challenges that comes with lack of ownership is the lack of commitment to "up-keep and beautification" of the exterior of the home. Interestingly, 93% of the occupied private dwellings in Rycroft are single detached houses.

**C) Traffic Counts:**

Being in the heart of the intersection of two provincial highways increases Rycroft's attractiveness for highway frontage business investors / opportunities. The table below shows the average annual daily traffic (AADT) at the HWY 2 and HWY 49 juncture.

| Rycroft - HWY 2 at HWY 49 - Average Annual Daily Traffic (AADT) 2018 | | | | |
|---|---|---|---|---|
| | East on 49 | West on 49 | South on 2 | North on 2 |
| Passenger | 1095 | 2425 | 3508 | 2752 |
| Recreational | 23 | 38 | 55 | 48 |
| Bus | 6 | 11 | 29 | 22 |
| Single Unit Truck | 61 | 134 | 181 | 112 |
| Tractor Trailer | 405 | 392 | 717 | 426 |
| **Total AADT 2018** | **1590** | **3000** | **4490** | **3360** |

The data presented in the above table is very simplified. To get a much better appreciation of the complexity of traffic flow analysis a schematic like the one below is much more useful; especially for identifying economic development opportunities; higher value commercial corners, and highway frontage developments.

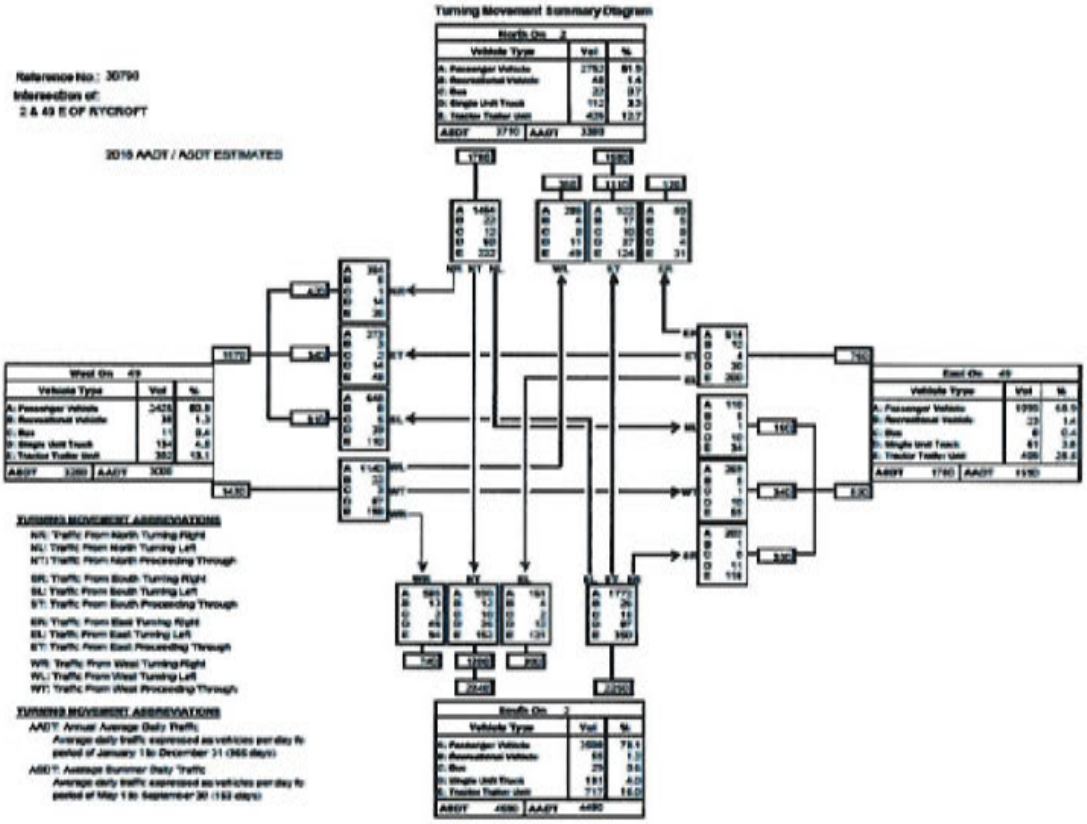


Note: A larger copy of the traffic flow schematic is provided in Appendix B; it is presented here only to show the complexity and highlight the information that could be extracted upon reviewing it in detail. The information presented in the traffic flow schematic is available in ten-year trends from Alberta Transportation.

The traffic flow schematic is daunting! However, when looked at closely one can garner a lot of infromation on traffic patterns by type, and apply this information to making decisions on business opportunities for highway developments. For example, the schematic shows the traffic counts that are coming from the North down Highway 2. At the juncture the driver has three options, turn left (NL), turn right (NR), or go straight through (NT). The schematic not only shows you how many drivers (for example) coming down from the North turn right (NR); it also shows the type of vechicle.

Understanding and applying this type of data can be critical in helping a business set-up a high-value truck stop vs. a seasonal low-value icream shop in the radius of this juncture. Site locators and business investors look for this information. Council and administration's knowledge of this information is critical to the successful economic development efforts to attract investors and businesses.

**D) Businesses In Rycroft:**

In 2018 there were 78 businesses registered in Rycroft. The graph below shows the ten-year trend for businesses regsitered, the highest year being 2010 with 85 businesses registered. The table shows the businesses by classification.

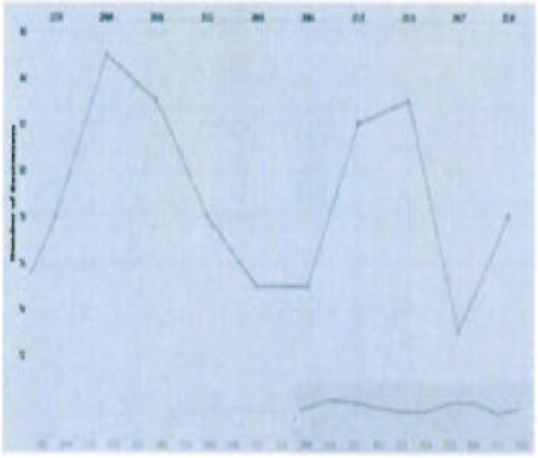

Overall the number of registered businesses in Rycroft has been stable, fluctuating by only a few across each year. The variable that would be more telling is the size of the business. Almost all of the businesses in Rycroft are small businesses – 98.7%.

| Industry Classification | 2018 | 2016 | 2014 | 2012 | 2010 |
|---|---|---|---|---|---|
| Accommodation and food services | 5 | 5 | 5 | 6 | 6 |
| Administrative and support, | 3 | 3 | 6 | 4 | 3 |
| Agriculture, forestry, fishing and hunting | 14 | 16 | 12 | 13 | 18 |
| Construction | 8 | 11 | 11 | 12 | 12 |
| Educational services | 0 | 1 | 1 | 1 | 1 |
| Finance and insurance | 1 | 0 | 0 | 0 | 0 |
| Health care and social assistance | 1 | 2 | 2 | 2 | 2 |
| Information and cultural industries | 2 | 1 | 2 | 2 | 2 |
| Manufacturing | 2 | 2 | 1 | | 2 |
| Mining, quarrying, and oil and gas | 5 | 7 | 5 | 6 | 5 |
| Other services | 6 | 6 | 4 | 6 | 8 |
| Professional, scientific and technical | 1 | 1 | 1 | 3 | 3 |
| Public administration | 1 | 1 | 1 | 1 | 1 |
| Real estate and rental and leasing | 5 | 5 | 3 | 4 | 3 |
| Retail trade | 5 | 6 | 6 | 5 | 5 |
| Transportation and warehousing | 12 | 11 | 10 | 8 | 8 |
| Wholesale trade | 7 | 5 | 5 | 5 | 6 |
| **Total Registered Businesses** | **78** | **83** | **75** | **78** | **85** |

**E: Agriculture**

Rycroft is surrounded by agriculture. The Village sits in the middle of the most northern agriculture region in the world – affectionally referred to as the Peace Country. Over the decades and generations of collective farming knowledge, the Peace Country has become internationally renowned for its superior agricultural products. The table shows the active agriculture land across the Peace Country and the top agriculture products this land is dedicated to.

| Northwest Alberta 2016 - Cropland (Acres) - By Municipality By Type of Crop | | | | | | | |
|---|---|---|---|---|---|---|---|
| Acres / Product | Canola | Wheat | Alfalfa and Mixes | Dry Field Peas | Barley | Tame Hay and Fodder | Oats |
| Canada 93,382,638 | 20,606,778 | 23,436,513 | 9,276,755 | 4,291,872 | 6,696,068 | 4,851,167 | 3,159,687 |
| Alberta 25,261,781 | 6,165,746 | 7,008,542 | 3,056,701 | 1,909,491 | 3,413,856 | 1,161,521 | 822,185 |
| NW-AB | #1 | #2 | #3 | #4 | #5 | #6 | #7 |
| 3,934,383 | 1,293,166 | 948,882 | 459,467 | 432,825 | 263,288 | 204,012 | 192,481 |
| N. Sunrise | 71,533 | 55,349 | 9,867 | 15,431 | 5,648 | 7,373 | 2,521 |
| Big Lakes | 38,843 | 29,340 | 27,583 | 6,925 | 8,617 | 32,814 | 6,603 |
| Clear Hills | 43,061 | 46,722 | 46,918 | 63,360 | 20,883 | 19,441 | 21,311 |
| N. Lights | 109,552 | 92,300 | 45,851 | x | 31,541 | 17,885 | 14,006 |
| Mackenzie | 118,761 | 68,991 | 33,505 | 50,299 | 24,231 | 9,273 | 52,983 |
| Greenview | 79,474 | 57,714 | 49,491 | 13,496 | 17,914 | 32,822 | 20,410 |
| County GP | 156,661 | 109,731 | 123,235 | 42,233 | 73,873 | 39,224 | 23,207 |
| Smoky River | 259,729 | 194,602 | 7,689 | 48,672 | 16,940 | 4,336 | 3,734 |
| Birch Hills | 149,018 | 82,982 | 17,053 | 41,159 | 25,842 | 3,081 | 3,557 |
| Spirit River | 45,252 | 32,390 | 5,812 | 30,525 | 7,492 | 3,765 | 5,046 |
| Saddle Hills | 78,833 | 81,914 | 55,547 | 48,325 | 17,269 | 19,165 | 23,632 |
| Fairview | 99,265 | 66,825 | 17,149 | 21,561 | 7,440 | 5,027 | 6,341 |
| Peace | 35,335 | 22,505 | 8,061 | 22,253 | 3,559 | 5,596 | 4,324 |

Located just a few kilometers south of Rycroft is the largest collective of throughput capacity grain terminals in Alberta. Together the grain terminals in Rycroft have the "any point in time" capacity to handle 95, 570 tonnes of food-grade grains.

| Grain Terminals in Peace Country | | |
|---|---|---|
| FALHER | Agrocorp Processing Ltd. | 7,200 |
| GRIMSHAW | Viterra Inc. | 32,760 |
| HIGH LEVEL | Richardson Pioneer Limited | 6,500 |
| MCLENNAN | Cargill Limited | 27,800 |
| NAMPA | Richardson Pioneer Limited | 44,580 |
| RYCROFT | Cargill Limited | 25,500 |
| RYCROFT | Grain Millers Canada Corp. | 4,070 |
| RYCROFT | Louis Dreyfus Company | 24,000 |
| RYCROFT | Richardson Pioneer Limited | 42,000 |
| SEXSMITH | Viterra Inc. | 30,250 |
| SMOKY RIVER | Viterra Inc. | 41,420 |

Note: As of February 2019 - Alberta has 83 primary grain terminals with a total capacity of 2M tonnes.

In 2018 the grain terminals in Rycroft handled almost 900,000 tonnes of raw agriculture products – the largest crop being Canola. This grain ends up in Rycroft to be transloaded to railcars – all delivered by grain trucks from around the Peace Country.

**Northwest Alberta – Deliveries to Primary Elevators**
**2017-18**
**Thousand Metric Tonnes**

| Production | 1,162,200 | 197,700 | 265,900 | 1,296,900 | 399,400 |
|---|---|---|---|---|---|
| **Delivery Point / Crop** | Wheat | Oat | Barley | Canola | Peas |
| **NAMPA** | 131.9 | - | 3.1 | 166.8 | 14.8 |
| **RYCROFT** | 234.1 | - | 23.8 | 402.0 | 133.9 |
| **HIGH LEVEL** | 56.7 | - | 3.7 | 56.2 | 21.5 |
| **SMOKY RIVER** | 139.0 | 0.1 | 13.6 | 160.2 | 40.3 |
| **SEXSMITH** | 166.5 | - | 64.0 | 134.8 | 63.3 |
| **MCLENNAN** | 151.8 | - | - | 132.0 | 20.0 |
| **FALHER** | 34.7 | - | - | - | 23.7 |
| **GRIMSHAW** | 108.9 | - | 50.4 | 173.1 | 73.5 |
| **Total Delivered** | 1,023,700 | 100 | 158,700 | 1,225,000 | 391,100 |
| **% of Production Delivered to Grain Terminals** | 88% | <1% | 60% | 94% | 98% |

From an economic development perspective, the amount of grain deliveries driving through the Rycroft area should be detailed to a greater knowledge level. The types of services that could be offered through Rycroft to this niche market may prove to be quite lucrative. For example, hopper car / container specialized cleaning services; a special harvest festival to coincide with the peak delivery season, a partnership with the grain terminals, grain dealers, truckers to provide "off the road" temporary housing with private beds and showers; heavy equipment road-side lube and tire shops – in essence Rycroft could position itself as the "service center of excellence" for agricultural product truck drivers and grain brokers. Collecting information on the needs of these grain haulers could be achieved with a simple survey at the dispatch booths located at the grain elevators (in partnership with the grain terminal owners).

## F: Mil rate and Property Costs

### Mil rate/property costs comparison to other municipalities

There are a number of factors that come into play when a business or individual makes a decision to locate in a community. Land and property values are important. Rycroft has affordable land and properties in comparison to its competition. Rycroft, however, also has a high mil rate. Fortunately, the Rycroft Village Council has identified this and has made efforts to reduce their mil rates. This can be difficult as a municipality needs to ensure they take in sufficient revenue to provide municipal services. The following tables are made up of 33 Peace region municipalities. The data comes from Alberta Municipal Affairs, June 2019. Appendix C presents a full-listing of the mil rates in the Peace Region.

**Five highest non-residential mil rates in the Peace Country**

| Municipality | Residential Mil rate | Non-residential mil rate |
|---|---|---|
| Village of Hines Creek | 17.11 | 36.72 |
| Town of McLennan | 19.00 | 29.00 |
| Village of Berwyn | 12.03 | 28.53 |
| Village of Rycroft | 10.04 | 20.91 |
| Birch Hills County | 10.38 | 18.18 |

**Five lowest non-residential mil rates in the Peace Country**

| Municipality | Residential mil rate | Non-residential mil rate |
|---|---|---|
| M.D. of Greenview | 2.70 | 7.83 |
| Town of Wembley | 7.45 | 10.81 |
| Town of Grimshaw | 7.91 | 10.82 |
| Town of Beaverlodge | 5.89 | 12.44 |
| Northern Sunrise County | 5.00 | 13.00 |

**Five highest residential mil rates in the Peace Country**

| Municipality | Residential mil rate | Non-residential mil rate |
|---|---|---|
| Town of McLennan | 19.00 | 29.00 |
| Village of Hines Creek | 17.11 | 36.72 |
| Village of Girlouxville | 16.12 | 16.12 |
| Town of Falher | 12.17 | 15.66 |
| Town of Manning | 11.42 | 14.24 |

**Five lowest residential mil rates in the Peace Country**

| Municipality | Residential mil rate | Non-residential mil rate |
|---|---|---|
| Clear Hills County | 1.30 | 14.65 |
| M.D. Greenview | 2.70 | 7.83 |
| County of Grande Prairie | 4.04 | 13.48 |
| County of Big Lakes | 4.31 | 14.50 |
| M.D. of Peace | 4.34 | 13.77 |

The above tables provide a snapshot of where Rycroft sits in the region with regard to property taxes. Rycroft has the fourth highest non-residential mil rate in the region while its' residential mil rate is in the high average. While the residential mil rate is important for attracting residents other factors such as living in a desirable location or locating in your home region are all factored in a person's decision to buy a residence in a specific municipality. As an example, people farming in the MD of Spirit River, may decide to retire and downsize to either Rycroft or Spirit River, because they view those communities as home.

The following table focuses on municipalities that would be in direct competition with the Village in attracting a commercial development where rail and road corridors are relevant. This would include a value-added industry such as an agricultural milling company.

**Rycroft Industrial Competition**

| Municipality | Residential mil rate | Non-residential mil rate |
|---|---|---|
| Village of Rycroft | 10.0 | 20.9 |
| M.D. of Spirit River | 7.2 | 15.5 |
| Town of Spirit River | 11.1 | 13.5 |
| Town of Sexsmith | 7.6 | 16.5 |
| County of Grande Prairie | 4.0 | 13.5 |
| Town of Falher | 12.2 | 15.7 |
| M.D. of Smoky | 5.3 | 16.3 |
| City of Grande Prairie | 10.2 | 16.4 |
| M.D. of Greenview | 2.7 | 7.8 |
| Saddle Hills County (Woking) | 3.9 | 12.6 |

The municipalities in the above table were chosen as competition to Rycroft based on agricultural statistics and transportation corridors. Rycroft and the surrounding region handle the most agricultural products along with the Smoky River region. An agricultural value-added business would want rail access and excellent highway access. Despite the higher mil rate in Rycroft, Rycroft does have the advantage of having serviced property. Most industry requires potable water in addition to gas and power. Most rural municipalities lack potable water and often other utilities need to be put in at the developers cost. This can often be the deciding factor in where an industry chooses to locate.

## Section 3 Descriptive Overview of The Village of Rycroft

The Village of Rycroft was incorporated in 1944, and is an historic railway stop. The Village, known as the "Hub of the Peace", is located 68 kilometers north of the City of Grande Prairie and eight kilometers east of the Town of Spirit River. It sits at the junctures of Highway 2 and Highway 49. The main industry is agriculture, with retail, oil, transportation, and education contributing to the economy. In 2017 the population of Rycroft was 612. There were 316 private dwellings; of which 275 which were occupied. The Village serves a surrounding trading area of approximately 6,000 persons. The Village of Rycroft is included in the G5; a locally referred to group of municipalities (Birch Hills County, The MD of Spirit River, Saddle Hills County, and the Town of Spirit River) that work together on regional projects, challenges, and opportunities.

**Quality of Life Assets** Potential newcomers, especially those with children, will review schools, housing, and recreational facilities as a component of determining if a community is the right fit for them and their family. The small urban options available to a newcomer include Rycroft and Spirit River. However, properties that may be available in the rural areas that radiate the Village also present choices for the newcomer. Council and administration must work together to continue investment in and upkeep of the Village's community assets to maintain their attractiveness to potential new residents. Following is brief list of the highlights of the Village's quality of life assets.

**Education:** The Rycroft School is part of the Peace Wapiti School Division and has an approximate enrollment of 110 students from Kindergarten to Grade 8. Students from Grade 9 – 12 are bussed to the high school in Spirit River, just west of the Village.

**Recreation Centres:** The Rycroft Arena is a hub for winter sports and is open from October – March, with plans to make it a year-round facility in the future. Eight kilometers into the Town of Spirit River also provides the MacLean Arena (skating & hockey) and the Richardson Pioneer Central Peace Aquatic Centre; an outdoor swimming facility.

**Agricultural Society and Community Centre:** Both of these facilities are large enough to host trade shows, dances, movies, concerts, and music festivals. The Village of Rycroft is a hub for local "gate to plate" agricultural producers that oversee a very active Farmer's Market and provide leadership to the Agricultural Society.

**Health Services:** Rycroft accesses health care at the newly built Central Peace Health Complex and the Community Health Center in Spirit River. Services include, but are not limited to: mental health services, diabetes prevention and wellness, immunizations, prenatal classes, home care, diagnostic imaging, emergency and laboratory services, and palliative care.

**Outdoor Recreation:** There are numerous ski hills and golf courses, and many campgrounds, and opportunities for boating, hunting and fishing.

**Services & Industry:** Most essential services are available within town limits: however, some business owners have expressed concern that they are just hanging on, waiting for a turn around in the economy. The Village requires a business license which is an excellent way for the Village to maintain a business inventory. The Village does not have a Chamber of Commerce.

In Rycroft, like most rural communities in Alberta, industry has slowed down. The decline in the oil industry, the increase in the minimum wage and the implementation of a carbon tax have had an effect on industry. Rycroft however, has weathered the storm better than others. While they have seen some business closures, they have also welcomed new industry such as Millar Richardson. Rycroft maintains a Coop Grocery store, fuelling stations, accommodation and unique industries such as Peace Country Memorials.

**Housing:** Housing is essential to attract new residents. Industry looks at housing availability when they look to moving into a municipality. A business that may have 10 employees may need housing for 10 families. They may also need housing for senior executive staff. In order to attract employees housing is necessary.

Rycroft has 316 private dwelling units with 275 being currently occupied. Housing types range from older singlewide trailers to more modern high-end homes. An average three-bedroom home would run about $150,000, considerably less than other Peace Region communities. Prices in Rycroft vary from $50,000 up to $500,000. Residential lots start at around $10,000.

**Transportation:** Rycroft's rail access and utility infrastructure makes it an ideal location for large scale developments. Industry related transportation is one of Rycroft's best-selling features and should always be highlighted to its best advantage.

## Section 4 Selling the Village of Rycroft

In order to successfully sell itself the Council and administration must think of itself as a commodity for sale and then a number of factors need to be in place.

1. The community must have something that makes it stand out from the crowd to the buyer. There are 352 municipalities in Alberta, varying from summer Villages to cities. The buyer intends to put his business in one of those municipalities. Most municipalities market themselves as "the best place to live, work and play." But are they really? It is essential a municipality knows it faults and is honest about them. A potential new business will do their homework and find out anyway. So what makes Rycroft better than all the rest? What makes Rycroft a contender?

2. Many factors, including marketing region, transportation, access to commodities, access to a labor force, property prices, property taxes, etc... all impact a buyer's decision on where to locate. Ultimately the buyer wants to make money. Can they make money locating their business in Rycroft?

3. Demand for the product. In the case of retail and hospitality, there must be sufficient population to support the business. In today's high labor, high tax (carbon tax) environment, more and more restaurants are closing. Hotels are suffering. The decline in the oil industry has greatly impacted not only the accommodation industry, but also service industries, from laundry services to fuel to groceries. Less people and fewer people with the financial resources have made these businesses less viable. Appendix D presents the Retail Trade Profile for the Central Peace Region.

4. Marketing region refers to the region from which a business can draw customers. Rycroft has an excellent location and draws from about 6,000 people plus through traffic on the highway to and from Grande Prairie. On average a grocery store needs approximately 4000 people to be sustainable. The number varies for the type of business. The one exception is niche stores, butcher shops, high-end ladies' fashion, giftware, antiques and similar stores that people will travel to specifically to shop there.

5. Because of the financial challenges in setting up a new business, or even assuming ownership of an existing one, the cost of setting up a business in Rycroft is crucial. Land and building values are important. Equally important however, is the quality of the existing infrastructure. Fifty-year-old wood structures downtown are not in high demand. Any retail chains will be looking for new-build highway frontage. Downtown frontage will largely be utilized by local entrepreneurs setting up a local business. There is also a trend toward converting downtown frontage to either residential or joint commercial/residential.

6. Property costs and availability greatly impact the decision of a business to locate in your community. It is important to have an inventory of available properties and contact information of the owners.

7. Incentives. Incentives to attract or sustain businesses is controversial. Providing tax incentives to new developers can anger existing business owners who invested in the community with no such incentives. On the other hand, waiving taxes to attract new businesses can be the incentive a business needs to locate in your community. Appendix E presents Municipal Affairs' Q&A sheet on the latest guidelines for tax incentives.

8. In addition to property prices, property taxes can have a huge impact on where someone will set up business. The Village of Rycroft, while recently lowering their mil rates, has at 20.91 the third highest non-residential mil rate in the Peace region. The Town of Spirit River, a couple kilometres down the road sits at 13.5 and the MD sits at 15.5. What that means is a property assessed at $100,000 in Rycroft would pay roughly $2000 a year in property taxes while a similarly assessed property in the Town of Spirit River would pay $1350 and in the MD $1550.

9. Other factors can mitigate the mil rate. Location, location, location. Rycroft sits at the juncture of two provincial highways. There are approximately 8000 vehicles traveling north and south on Highway 2 through Rycroft everyday. Of that total number approximately 1200 turn west toward the BC border and another 340 continue west from Highway 49. We also know about 1400 vehicles head east on Highway 49 toward courtesy corner. Rycroft's traffic volume is a drawing card.

10. Access to labor and housing. Rycroft sits strategically in the middle of the G5. There are 316 dwelling units in Rycroft with a mix of housing ranging from older single wide trailers to modern luxury style homes. There also appears to be local investors that would consider building rental properties if the need arose. Labor is an issue, but not specific to Rycroft.

11. There is a reason consumer have turned to online shopping. Online catalogues let consumers easily and comfortably shop from their home, peruse the products, select what they want, go the shopping cart and identify all applicable costs. Similarly, investors and developers want a simple one stop process to working with a community. Everything must be in one place, easily accessible and with a knowledgeable municipal representative that walks them through the process.

12. Land Use Bylaw. It is essential that the LUB be up-to-date and has been thoroughly revised to allow developments you want in your municipality. In the time it takes for a municipality to rezone a property to accommodate a potential business, that business can locate in another community. Ensure your LUB reflects Council's vision of what businesses they want where in the community.

13. Equally important is aftercare. People love online shopping and Costco, because if they are unhappy with their purchase, they can send it back for a full refund. Well, a municipality can't do that. But what it can do is ensure that once a business moves into to town, they do their due diligence and follow up to ensure the business is happy. Visit the new business. Promote it on the municipal website. And utilize the business.

14. Esthetics. Plain and simple, people want to live in an attractive and well-maintained community. We want pretty streets (that doesn't mean paved) with cared for yards, free of derelict buildings and yards full of junk. Rycroft has an unsightly premises bylaw but is it working?

## Section 5 Industry Site Locators

Site locators looking for potential opportunities for investors generally lean toward Alberta's larger centres and along the QE2 Highway between Edmonton and Calgary. When looking north, they tend to look at Grande Prairie and the surrounding County. However, a developer looking for property with excellent highway access and rail access would also compare properties not only in the City and County of Grande Prairie; Sexsmith, Woking (Saddle Hills County), the M.D. of Spirit River and the Village of Rycroft would also be reviewed. Based on mil rates alone a developer's rated preference would first be Woking (Saddle Hills County), then the County of Grande Prairie, then the M.D. Spirit River, then the City of Grande Prairie, then the Town of Sexsmith, and finally the Village of Rycroft.

Fortunately, a number of other factors come in to play. For example, if property costs were given the highest ratio of importance to the investor the list would likely be first the Village of Rycroft, then Woking and then the M.D. of Spirit River and Sexsmith, and lastly the City and County of Grande Prairie. Based solely on rail access it would be a tie between The Village of Rycroft, Sexsmith, the M.D. of Spirit River and the County of Grande Prairie. Based on Agricultural deliveries, it would be Rycroft and the M.D. of Spirit River, followed by the County of Grande Prairie and Sexsmith.

Another key factor in helping an industry decide where they will locate is the level of municipal readiness and services in place. How ready a municipality is with all development documents, relevant land use bylaw's in place, and access to knowledgeable staff, can be the tipping point between one municipality and the other.

The reality is industry bases their decision on a combination of these factors. For value-added agricultural businesses, Rycroft rates highly. Developers may also be looking for serviced land, high speed internet or an existing site with infrastructure. Developers from outside the region also have concerns around access to workers and housing for their employees. This was also a statement of concern from businesses interviewed.

**1. Rycroft Property inventory**

Something that can slow down or lose a development is not having property immediately available. It helps to have a running inventory of available properties in Rycroft for someone looking for a property, so you are able to supply something quickly.

a. **Serviced vs unserviced**
    i. This is important when you are sending a proposal to a potential business. If you are building a business case for a new development on the tracks or a retail business downtown it helps to know what is available and an approximate price point. Some developers want to invest immediately. Being delayed by not knowing what property is available, what the development process is, what services are available or having unhelpful staff can send a development elsewhere. Every community says they are open for business but are you really?
b. **Municipally held and private**
    i. The Village of Rycroft already has a property inventory of municipally owned land. The municipality should also have a list of privately-owned properties including whether the property is serviced and what infrastructure is in place.

**2. Rycroft Land Use Bylaw**

The Village of Rycroft's Land Use Bylaw outlines the various zoning districts of the Village along with what is a Permitted Use and what is Discretionary Use. Any development that is not listed under permitted use must then go to the Development Officer who is appointed by the Rycroft Village Council to act as the Development Authority. Under Commercial District, Limited Highway Commercial, Highway Development Restricted and Industrial District, everything is Discretionary. While some Councils feel this gives them greater control over developments in these districts, it also deters developers from pursuing opportunities as they do not know if a proposed development would be approved until they put in a development permit. And they can't put in a development permit until they

have purchased or leased the property. Rycroft Council should revisit their Land Use Bylaw to determine what they would consider permitted uses for the various districts. Because of the decline in rural main streets, Council may also wish to look at allowing as discretionary main floor residential in this zone, so long as there is a commercial venture in the front.

Rycroft's Land Use Bylaws should also broaden the definition of modular home to "modular building". There are examples in the Peace region of modular apartment buildings, and it is not uncommon to see a modular building on commercial and industrial sites used as office buildings.

> **MODULAR BUILDING** means a development that is built off-site and designed to be transported and assembled on a permanent foundation at the building site. Upon arriving at the site for placement is ready for year-round occupancy. A modular building may include residential, commercial, industrial and institutional buildings. This definition does not apply to manufactured homes, recreational vehicles or industrial camp trailers.

Section 5.2 of the Rycroft LUB states "a development permit application for a use which is not listed as a "permitted use" or a "discretionary use" in the subject district shall be refused." It may be worthwhile to review all definitions to ensure acceptability and inclusion of a wide variety of businesses in each land use category. While it is simple to say that the development officer has the authority to approve any application, the wording of this section could deter people from even trying.

## Section 6 Economic Development Opportunities

As previously highlighted, the Village of Rycroft needs to focus on three primary economic development opportunities:

A. Downtown re-visioning incorporating local entrepreneurs,

B. Highway frontage, high-value commercial products & services,

C. Value-added agricultural developments and high-value agricultural services

**Opportunity A: Downtown development**: Small rural, urban municipalities are having challenges maintaining their downtowns. Older buildings are hard to fill. Government policies on minimum wage and taxes are making it more expensive to run a business, internet shopping is increasingly popular, and a slow economy means people spend less.

For these reasons, the Village should focus on how it wants to recreate its downtown. The lack of high-speed internet is a challenge for many rural based businesses. The Village should pursue options to introduce high speed internet to the community. There are a variety of options available. Both Telus and Eastlink have started offering high speed internet into smaller communities such as Peace River and Grimshaw. Other regions such as Big Lakes and Saddle Hills County have pursued bringing high speed internet in themselves. Another company based out of Grande Prairie would also be worthwhile pursuing. It is recommended that the Village of Rycroft invite GP Optix to a Council meeting to discuss internet options. Gp Optix has provided high speed internet to the communities of Wembley and Valhalla and specializes in smaller rural communities. Note: GP Optix Kobus De Jager Business Manager & CEO 780.296.4993

Local entrepreneurs identifying niche markets and filling voids in a region are viable options. There are a number of unique niche businesses in the Peace region. Grimshaw has Johnny's Sausage and Almyrias, Beaverlodge has the Butcher Shop and Fairview has a craft brewery. The market radius for unique shops is much higher than for traditional retail and therefore more sustainable in a small rural community.

PREDA recently held an entrepreneur workshop in the communities of Grimshaw, St. Isidore and Rycroft. The sessions brought in speakers to talk about everything from demographics, franchise, human resources and business financing. While Grimshaw and St Isidore had ½ dozen registrations, no one from the Rycroft region attended. The sessions were advertised in the local paper, Move Up magazine and on the radio. This would suggest a lack of entrepreneurial spirit in the region. However, entrepreneurs can be timid about bringing their ideas to a public forum.

Appendix F presents a draft suggestion for an entrepreneurial grant. A $2000 grant would be awarded to 2 local residents to work with the Peace River Community Futures on developing a business case for their unique business. For new startups a business plan is essential. Additionally, a business plan is required when applying for financing.

Investment Co-ops are also an option to help local business get started and be supported by local residents. Ratepayers are more willing to invest in their own community; however, sometimes the cost can be forbidding. An investment Co-op is a group of investors that has been created to invest in local opportunities. More information on Co-ops can be sourced from Cooperatives First https://cooperativesfirst.com/. Cooperatives First will come to Rycroft at no charge to meet with residents interested in creating a Co-op.

**Opportunity B: Highway Commercial:** Rycroft, despite its strategic location will have challenges attracting franchise type retail and hospitality. The location of the Village, at the juncture of two provincial highways, should lend itself to this type of development. However; most franchise drive thru restaurants do not normally look to a Village for development. However, the Village should still create a promotion package detailing traffic counts (as supplied in section 2 of this report), as supplied in this document, to potential drive-thru restaurants such as Tim Hortons, A & W and Subway, to locate on highway frontage. The normal process would be to contact the franchise owner who owns the territory. In the case of Tim Hortons, a probable contact is Tracy Allard who owns two Tim Hortons in Grande Prairie. A business case would need to be submitted to her and she would submit to Tim Hortons headquarters if she is interested in pursuing this opportunity. The Village could open a discussion with existing highway frontage businesses and landowners to assess interest from them to move forward with this opportunity.

In addition to drive thru restaurants the Villages' location lends itself to other development including storage, manufacturing, servicing and processing. These are difficult to attract with cold calls. Instead the Village needs to be prepared for them when they call. The Village needs to ensure they have a promotional package detailing available residential properties, Village advantages, commercial land/building availability, taxes and incentives, information on the development process and all necessary contacts.

**Opportunity C Value-added Commodity developments:** The Village of Rycroft is truly the agricultural hub of the peace region, followed by the Smoky River region. Both regions handle the most agricultural commodities in the Peace Region.

Rycroft has the highest output of wheat, canola and peas and the third highest output of barley in the Peace Region. Deliveries to the primary elevators in 2018 show Rycroft receiving 402 metric tonnes of canola 133.9 metric tonnes of peas, and 234.1 metric tonnes of wheat. In 2108 the grain terminals in Rycroft handled 900,000 tonnes of raw agriculture products!

Farm traffic heading to Rycroft to deliver commodities also opens the door to attract businesses that cater to these drivers needs. Rycroft should further investigate opportunities in attracting farm equipment and supply shops to the Village. An option for the Village may be to personally survey delivery vehicle drivers as to where they shop for farm products and supplies and assess if there is a business case for a farm supply shop in Rycroft.

## Section 7 Other Considerations

**Community Beautification** Many rural communities take looks for granted. An unattractive municipality looks poorly attended to and that can reflect on the impression on how the municipality is run. The Village of Rycroft has an unsightly premises bylaw in place. It is essential to review it and determine how successful it is.

Rycroft is fortunate to have a number of new housing developments. New developments encourage others to build new housing within the Village, often replacing older unkempt properties. In order to further encourage this type of residential development Rycroft needs to implement efforts to encourage proper house and yard care. Presented in the Appendix G is a sample of a community beautification contest the municipality can hold. Prize baskets can be made up of gifts from local businesses. Winning properties can also be featured in the local paper and on the Village website.

**Vision & Mission Statement** The Village needs to develop a vision and mission statement. While this may seem unimportant, having a vision and mission statement provides a guiding principle for Village employees, Council and ratepayers.

**Municipal Processes** One of the most important things a municipality must do to encourage business development is to be prepared. When a potential business arrives at the Village office, the administration should be prepared with a complete package of material a business requires to move forward. If you are not prepared there are other municipalities out there that are. This includes not just businesses but residential as well. Packages should be differentiated between business and residential with a public relations type letter from the Council included. The Village should invest in the creation of professional packages and always have a few on hand at the reception area for walk-in inquires.

| Business & Residential Packages | | |
|---|---|---|
| Commercial Property Inventory (For Business Packages) | Residential Property Inventory | LUB Relevant Zoning Types |
| Utilities & Contacts | Utility capacity | CN Contacts |
| Building Inspector Contacts | List of Quality of Life Assets (eg..Schools, Medical, Recreation) | Banking & Business Directory |
| Residential Property Taxes | List of Residential Municipal Services | Commercial Taxes / Licenses |

The Village should also develop a visitation/follow up protocol for any new or potential businesses. One of the most common complaints from businesses is that communities work to attract them to their municipality and then once they settle in, no one from the municipality checks in to see how they are doing or if the municipality can assist them in anyway. Likewise, when a developer comes to the Village, the administration should do follow up calls to see if the developer needs any additional information or assistance.

**Targeted Marketing**

There are very few companies looking at expanding into northern Alberta, although there has been some interest from foreign investors, predominately China and India. Their interest has been in canola and peas and their interest is in value adding. The downturn in the economy, and the recent dispute between China and Canada has slowed this interest down substantially. How long this will last is uncertain. However, Rycroft should be prepared should the interest return.

The Government of Alberta has an international marketing team that works with municipalities and industry to encourage foreign investment in Canada. The website https://investalberta.ca/alberta-international-offices/ will provide the Village substantial information on what these offices do, where they are located and how they can help.

| . Alberta Foreign Trade Offices | | |
|---|---|---|
| Beijing<br>Guangzhou<br>Hong Kong<br>Japan | Korea<br>Mexico<br>New Dehli<br>Shanghai | Singapore<br>Taiwan<br>United Kingdom<br>Washington |

The Canadian Agricultural Partnership program is a five-year, $3 billion federal-provincial-territorial investment in the agriculture, agri-food and agri-based products sector that began in April 2018 and is the successor of the 2013-18 Growing Forward 2 partnership. The programs offered are varied and many can assist with value-added products, research and innovation, and feasibility studies. For more information visit https://cap.alberta.ca/CAP/.

**The Village may want to be pro-active and select it's focus and prepare a business case to support one or more value-added agricultural business cases.** In addition to the above support the province also offers the CARES grant (https://www.alberta.ca/community-regional-economic-support-program.aspx) for the development of business cases and strategic plans. The grant is a 50/50 cost shared grant. However, Rycroft as a member of PREDA, can also apply for a PREDA Municipal Project Fund to cover a portion of their 50 percent. Once a business case is complete, the Government of Alberta international offices will assist with promoting the project. There are a few PREDA members who have taken this proactive strategy and have presented their business cases to various potential investors through trade shows and visiting investors. Appendix H presents a summary sheet of Alberta's export products by country in 2018.

**Website and Townfolio**

As part of the Villages' marketing, it is important to have an investor ready webpage linked on the main website. On that link economic development relevant data (basically everything included in the marketing package) should be included and designed for easy downloading and printing. Basic data such as census information, household income, dwelling units etc... are also helpful for developers and investors looking at Rycroft. The cost both in both time and money for the Village to gather the information for inclusion on the Village website is very high. Townfolio (.https://jointownfolio.com/) provides this service for a yearly fee and updates your community profile from trusted and current data on a regular basis.

## Section 8 Closing Comments and Recommendations

Attracting businesses to your municipality is not an easy task in rural northern Alberta. Most businesses look to the larger centre where they will have a larger client base and greater foot and vehicle traffic. Many businesses try to locate next to large major retailers because their shoppers will see the smaller retailer and stop in to see what they have. Rural urbans are also a challenge because many people in communities like Rycroft, have the convenience of "popping" into Grande Prairie where the selection is greater, and the prices are often lower.

Rycroft is fortunate for a community of its size to have a grocery store. Most Villages do not have one. Despite that good fortune, it can be assumed that most Rycroft ratepayers, have a Costco card and likely make a habit out of shopping at the large city retailers. The failure of local residents to shop local is a common complaint among small-town retailers.

Rycroft is also fortunate to be in a very strategic location with enough distance between itself and Grande Prairie that is should be able to support a reasonable variety of retail services. It is also the agricultural hub for the Peace Region with excellent transportation routes and services that are very attractive to industry that requires rail and/or truck services.

In order to move forward and make Rycroft a community of choice for developers, entrepreneurs and investors, Rycroft should implement the following ideas:

1. Focus on three primary development opportunities:

    A. Downtown re-visioning incorporating local entrepreneurs,
    B. Highway frontage, high-value commercial products & services,
    C. Value-added agricultural developments and high-value agricultural services

As discussed in this report, narrowing the Village's focus will reduce the time and cost of marketing and increase the chance of success. The commodity data and traffic counts presented in this report should be used to target specific drive thru restaurants and value-added processors. Additionally, the volume of traffic from producer vehicles delivering to Rycroft identifies an opportunity to attract farm supply retailers.

2. Continue with the trend to bring non-residential mil rights into line with its competition.

   Mil rates matter. Local investors and entrepreneurs will invest locally because it is home. But a large-scale value-added processor or a farm implement dealer will take mil rates into consideration.

3. Look into development incentives

   New legislation amends the Municipal Government Act to allow municipalities to offer property tax incentives to non-residential properties to attract investment and development.

4. Look into options to bring in highspeed internet

   Village of Rycroft Council should further investigate the opportunity to invite GP Optix to present to the Council a model to bring in high speed internet. Today, many businesses need high speed internet. Additionally, Rycroft could attract home based entrepreneurs and employees that require high speed internet.

5. Update website and incorporate economic development

   Rycroft has put out an RFP for new website development. The Village should ensure there is an economic development tab and include info on commodity production, traffic counts, available properties and the LUB. Also include all information relevant to development process and contact lists for all service providers. Rycroft should also solicit a quote from Townfolio on providing statistical data, which they routinely update, for the webpage.

6. Update Land Use bylaw

   The Village's LUB should be updated. Council should determine what businesses are permitted for each land use section, eliminating any doubts a developer may have for purchasing a property. Rycroft should amend the definition of modular and should consider main floor residential in the back of commercial properties.

7. Create up-to-date property inventory

   Create an updated list of available properties and contact information for all properties, including rental properties. A new business owner may not want to purchase a residential property right away, or they may need to know rental properties are available for staff.

8. Create an economic development committee

   It is important to keep in touch with your business community. Appendix I presents the parameters for a committee. The committee would exist in advisory capacity. Business owners often get leads on potential opportunities long before the Village Council knows about it.

9. Implement an entrepreneur grant

   This grant would award two local residents $2000 to work with the Peace River Community Futures on developing a business case for their unique business. For new startups a business plan is essential. Additionally, a business plan is required when applying for financing.
10. Develop a beautification strategy - **Looks matter.**
11. Vision and Mission: While this may seem unimportant, having a vision and mission statement provides a guiding principle for Village employees, Council and ratepayers.
12. Research grants (https://cap.alberta.ca/CAP/ to develop a business case for a value-added agricultural commodity.
13. Assemble a Business / Residential Information Package and have it professionally printed and packaged with a public-relations letter from Council.

In closing, the Village of Rycroft can follow several simple steps to increase their opportunity of attracting economic development. To follow-through on these suggestions a time commitment from current administration is required. If this is not feasible the Village needs to prioritize funds to create a position that is dedicated to implementing the Council's economic development directives.

## Appendices

A Central Peace Population Chart

B Traffic Flow Schematic

C Mil Rates and Debt Limits in the Peace Region

D Retail Trade Profile – Central Peace

E Property Tax Incentives – GOA Q&A Sheet

F Entrepreneurial Grants

G Community Beautification Contest

H Alberta Exports 2018

I Economic Development Committee Parameters

## Resources

Information for this report has been collected from a variety of data sources:

Statistics Canada – 2016 Population Census

Statistics Canada – 2016 Agricultural Census

Canadian Grain Commission

Alberta Transportation

Industry Canada – Trade

Alberta Economic Development & Trade

Alberta Municipal Affairs

Invest Alberta - International Trade Offices

Peace Region Retail Trade Profiles (PREDA)

Northern Commodities – Production, Exports, and Mode of Transport (PREDA)

For inquires regarding this report please contact:

Daniel E. Dibbelt

Dibbelt Northern Development Services

10128 95th Avenue

Grande Prairie, Alberta

T8V 0L4

Voice: 780-527-4033

Email: emmerydibbelt@outlook.com

APPENDIX A

**Central Peace Population 2016**

| | Birch Hills County, | | | Spirit River No. 133, | | | Rycroft, Village | | | Spirit River, Town | | | Saddle Hills County, | | |
|---|---|---|---|---|---|---|---|---|---|---|---|---|---|---|---|
| Population; 2016 | 1553 | | | 700 | | | 612 | | | 995 | | | 2225 | | |
| Population; 2011 | 1582 | | | 713 | | | 628 | | | 1025 | | | 2288 | | |
| Total private dwellings | 616 | | | 306 | | | 316 | | | 487 | | | 978 | | |
| Occupied private dwellings | 495 | | | 275 | | | 275 | | | 445 | | | 840 | | |
| Owner | 415 | | | 280 | | | 180 | | | 350 | | | 755 | | |
| **Population - Age Groups** | **Total** | **M** | **F** | **Total** | **M** | **F** | **Total** | **M** | **F** | **Total** | **M** | **F** | **Total** | **M** | **F** |
| 0 to 4 years | 110 | 60 | 55 | 40 | 30 | 10 | 40 | 15 | 25 | 40 | 20 | 15 | 160 | 80 | 80 |
| 5 to 9 years | 115 | 50 | 60 | 40 | 25 | 15 | 35 | 25 | 15 | 45 | 25 | 15 | 150 | 80 | 70 |
| 10 to 14 years | 125 | 70 | 50 | 40 | 25 | 20 | 35 | 15 | 15 | 45 | 15 | 25 | 150 | 80 | 70 |
| 15 to 19 years | 110 | 60 | 45 | 40 | 25 | 20 | 35 | 20 | 10 | 70 | 30 | 35 | 140 | 65 | 75 |
| 20 to 24 years | 75 | 45 | 30 | 40 | 20 | 20 | 35 | 20 | 20 | 55 | 35 | 25 | 85 | 55 | 35 |
| 25 to 29 years | 60 | 30 | 35 | 20 | 10 | 10 | 35 | 15 | 15 | 50 | 25 | 30 | 130 | 60 | 65 |
| 30 to 34 years | 75 | 40 | 35 | 35 | 15 | 15 | 45 | 25 | 20 | 55 | 25 | 25 | 130 | 65 | 65 |
| 35 to 39 years | 85 | 40 | 40 | 35 | 20 | 10 | 45 | 20 | 20 | 55 | 25 | 25 | 115 | 65 | 50 |
| 40 to 44 years | 95 | 50 | 45 | 35 | 20 | 10 | 35 | 20 | 15 | 50 | 25 | 25 | 115 | 60 | 60 |
| 45 to 49 years | 90 | 50 | 45 | 60 | 30 | 30 | 40 | 20 | 20 | 65 | 30 | 30 | 145 | 75 | 65 |
| 50 to 54 years | 125 | 70 | 60 | 80 | 35 | 40 | 55 | 25 | 25 | 85 | 45 | 35 | 175 | 85 | 90 |
| 55 to 59 years | 125 | 60 | 70 | 55 | 30 | 20 | 40 | 20 | 20 | 70 | 40 | 35 | 200 | 100 | 95 |
| 60 to 64 years | 105 | 50 | 50 | 55 | 30 | 30 | 45 | 25 | 20 | 55 | 30 | 30 | 180 | 95 | 80 |
| 65 to 69 years | 100 | 55 | 40 | 55 | 30 | 25 | 30 | 10 | 25 | 70 | 35 | 35 | 135 | 60 | 70 |
| 70 to 74 years | 70 | 40 | 30 | 20 | 10 | 15 | 30 | 15 | 15 | 60 | 15 | 45 | 90 | 50 | 45 |
| 75 to 79 years | 40 | 20 | 20 | 25 | 10 | 10 | 20 | 10 | 15 | 50 | 20 | 30 | 70 | 40 | 25 |
| 80 to 84 years | 25 | 15 | 10 | 15 | 10 | 5 | 10 | 5 | 0 | 40 | 10 | 30 | 35 | 25 | 15 |
| 85 to 89 years | 10 | 5 | 5 | 10 | 5 | 5 | 10 | 0 | 10 | 30 | 25 | 10 | 15 | 10 | 5 |
| 90 to 94 years | 5 | 0 | 5 | 5 | 0 | 0 | 0 | 0 | 0 | 10 | 0 | 10 | 0 | 5 | 0 |
| 95 to 99 years | 0 | 0 | 0 | 0 | 0 | 0 | 0 | 0 | 0 | 5 | 0 | 0 | 5 | 0 | 0 |
| 100 years and over | 0 | 0 | 0 | 0 | 0 | 0 | 0 | 0 | 0 | 0 | 0 | 0 | 0 | 0 | 0 |
| Average age of the population | 39.2 | 39.3 | 39.1 | 42.3 | 41.2 | 43.7 | 41.2 | 40.2 | 42 | 46 | 43.6 | 48.3 | 39.9 | 40.6 | 39.3 |
| Married / common law | 795 | 400 | 390 | 395 | 195 | 200 | 295 | 150 | 145 | 470 | 235 | 235 | 1310 | 655 | 655 |
| Not married / common law | 405 | 235 | 165 | 180 | 105 | 75 | 215 | 105 | 110 | 405 | 180 | 220 | 455 | 265 | 190 |
| Average size of families | 2.8 | | | 2.8 | | | 2.8 | | | 2.6 | | | 2.9 | | |
| Total lone-parent families | 30 | | | 25 | | | 25 | | | 40 | | | 35 | | |
| English only | 1390 | 730 | 660 | 675 | 370 | 305 | 590 | 295 | 300 | 935 | 460 | 475 | 2170 | 1140 | 1035 |

B

## Turning Movement Summary Diagram

**Reference No.:** 30790

**Intersection of:**
2 & 49 E OF RYCROFT

2018 AADT / ASDT ESTIMATES

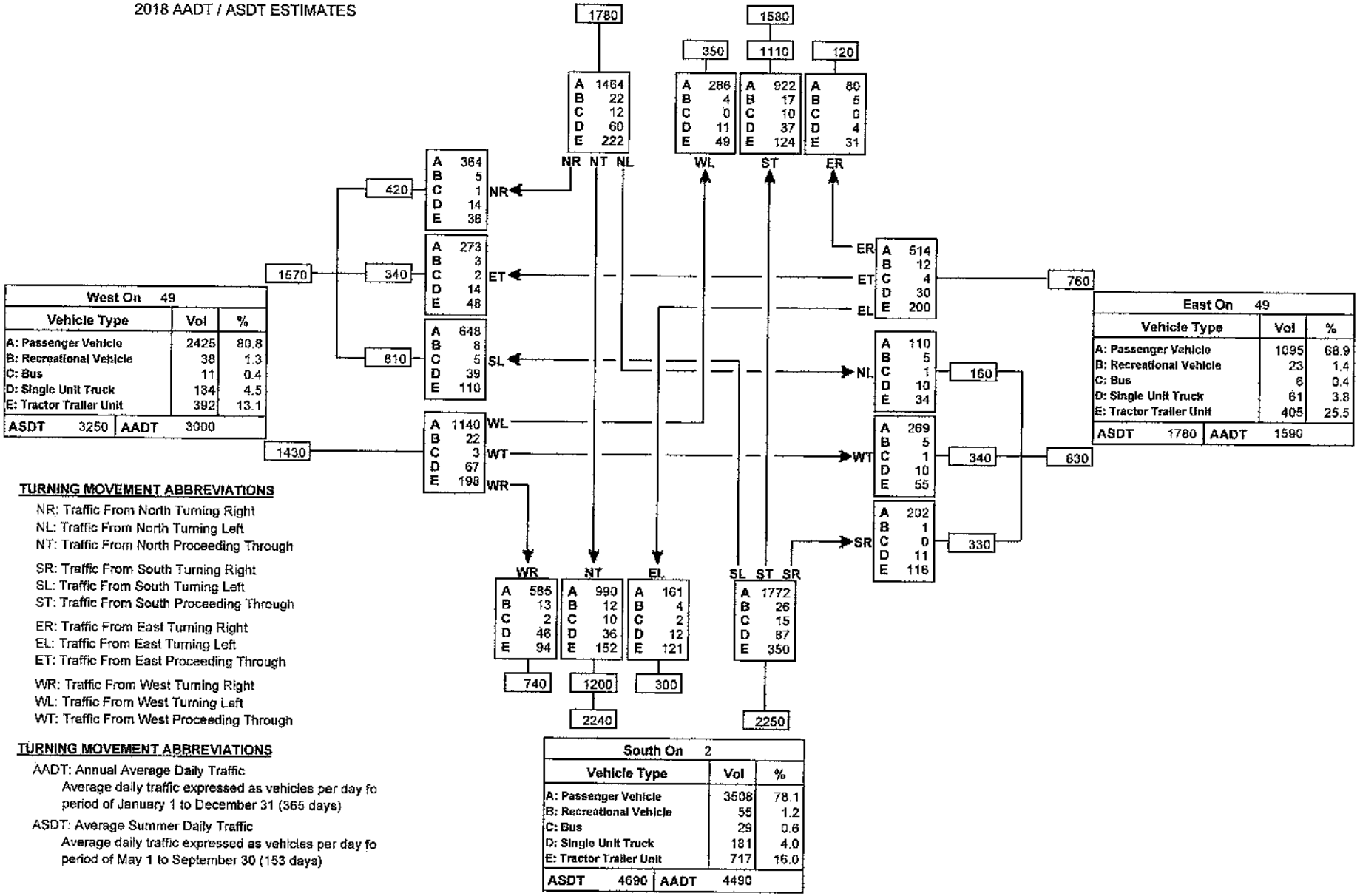


**TURNING MOVEMENT ABBREVIATIONS**

NR: Traffic From North Turning Right
NL: Traffic From North Turning Left
NT: Traffic From North Proceeding Through

SR: Traffic From South Turning Right
SL: Traffic From South Turning Left
ST: Traffic From South Proceeding Through

ER: Traffic From East Turning Right
EL: Traffic From East Turning Left
ET: Traffic From East Proceeding Through

WR: Traffic From West Turning Right
WL: Traffic From West Turning Left
WT: Traffic From West Proceeding Through

**TURNING MOVEMENT ABBREVIATIONS**

AADT: Annual Average Daily Traffic
Average daily traffic expressed as vehicles per day fo
period of January 1 to December 31 (365 days)

ASDT: Average Summer Daily Traffic
Average daily traffic expressed as vehicles per day fo
period of May 1 to September 30 (153 days)

## Turning Movement Summary Diagram

**Reference No.:** 30790

**Intersection of:**
2 & 49 E OF RYCROFT

2018 a.m. 100th Highest Hour ESTIMATES

| North On 2 | | |
|---|---|---|
| Vehicle Type | Vol | % |
| A: Passenger Vehicle | 301 | 82.2 |
| B: Recreational Vehicle | 6 | 1.6 |
| C: Bus | 0 | 0.0 |
| D: Single Unit Truck | 9 | 2.5 |
| E: Tractor Trailer Unit | 50 | 13.7 |
| Total | 366 | |

| West On 49 | | |
|---|---|---|
| Vehicle Type | Vol | % |
| A: Passenger Vehicle | 216 | 73.7 |
| B: Recreational Vehicle | 5 | 1.7 |
| C: Bus | 2 | 0.7 |
| D: Single Unit Truck | 13 | 4.4 |
| E: Tractor Trailer Unit | 57 | 19.5 |
| Total | 293 | |

| East On 49 | | |
|---|---|---|
| Vehicle Type | Vol | % |
| A: Passenger Vehicle | 105 | 66.5 |
| B: Recreational Vehicle | 2 | 1.3 |
| C: Bus | 2 | 1.3 |
| D: Single Unit Truck | 0 | 0.0 |
| E: Tractor Trailer Unit | 49 | 31.0 |
| Total | 158 | |

| South On 2 | | |
|---|---|---|
| Vehicle Type | Vol | % |
| A: Passenger Vehicle | 346 | 76.0 |
| B: Recreational Vehicle | 5 | 1.1 |
| C: Bus | 0 | 0.0 |
| D: Single Unit Truck | 22 | 4.8 |
| E: Tractor Trailer Unit | 82 | 18.0 |
| Total | 455 | |

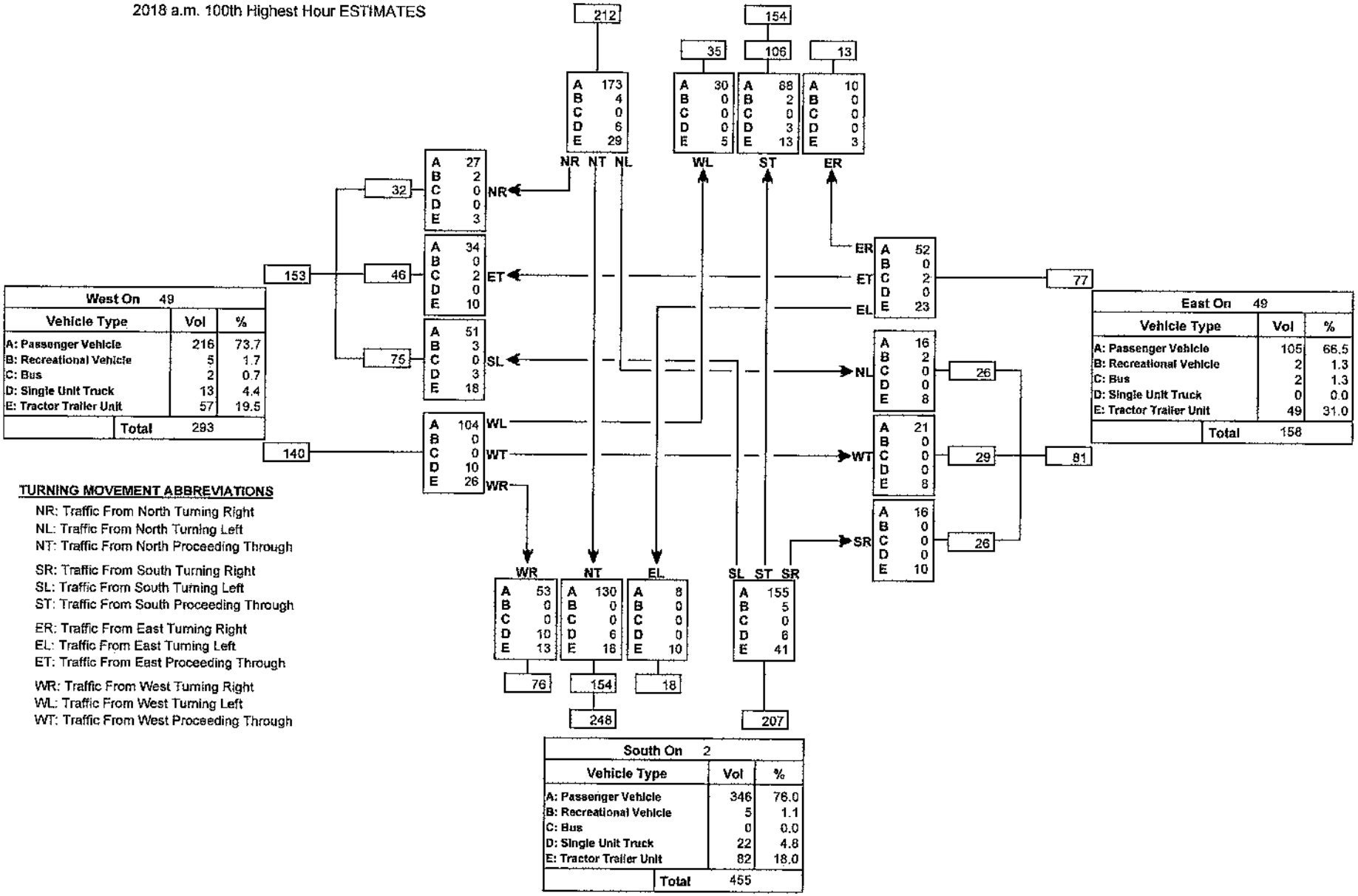


**TURNING MOVEMENT ABBREVIATIONS**

NR: Traffic From North Turning Right
NL: Traffic From North Turning Left
NT: Traffic From North Proceeding Through

SR: Traffic From South Turning Right
SL: Traffic From South Turning Left
ST: Traffic From South Proceeding Through

ER: Traffic From East Turning Right
EL: Traffic From East Turning Left
ET: Traffic From East Proceeding Through

WR: Traffic From West Turning Right
WL: Traffic From West Turning Left
WT: Traffic From West Proceeding Through

## Turning Movement Summary Diagram

**Reference No.:** 30790
**Intersection of:**
2 & 49 E OF RYCROFT

2018 p.m. 100th Highest Hour ESTIMATES

| North On 2 | | |
|---|---|---|
| Vehicle Type | Vol | % |
| A: Passenger Vehicle | 304 | 82.4 |
| B: Recreational Vehicle | 10 | 2.7 |
| C: Bus | 2 | 0.5 |
| D: Single Unit Truck | 11 | 3.0 |
| E: Tractor Trailer Unit | 42 | 11.4 |
| Total | 369 | |

| West On 49 | | |
|---|---|---|
| Vehicle Type | Vol | % |
| A: Passenger Vehicle | 250 | 80.6 |
| B: Recreational Vehicle | 7 | 2.3 |
| C: Bus | 1 | 0.3 |
| D: Single Unit Truck | 6 | 1.9 |
| E: Tractor Trailer Unit | 46 | 14.8 |
| Total | 310 | |

| East On 49 | | |
|---|---|---|
| Vehicle Type | Vol | % |
| A: Passenger Vehicle | 144 | 73.1 |
| B: Recreational Vehicle | 5 | 2.5 |
| C: Bus | 2 | 1.0 |
| D: Single Unit Truck | 6 | 3.0 |
| E: Tractor Trailer Unit | 40 | 20.3 |
| Total | 197 | |

| South On 2 | | |
|---|---|---|
| Vehicle Type | Vol | % |
| A: Passenger Vehicle | 360 | 80.0 |
| B: Recreational Vehicle | 12 | 2.7 |
| C: Bus | 3 | 0.7 |
| D: Single Unit Truck | 9 | 2.0 |
| E: Tractor Trailer Unit | 66 | 14.7 |
| Total | 450 | |

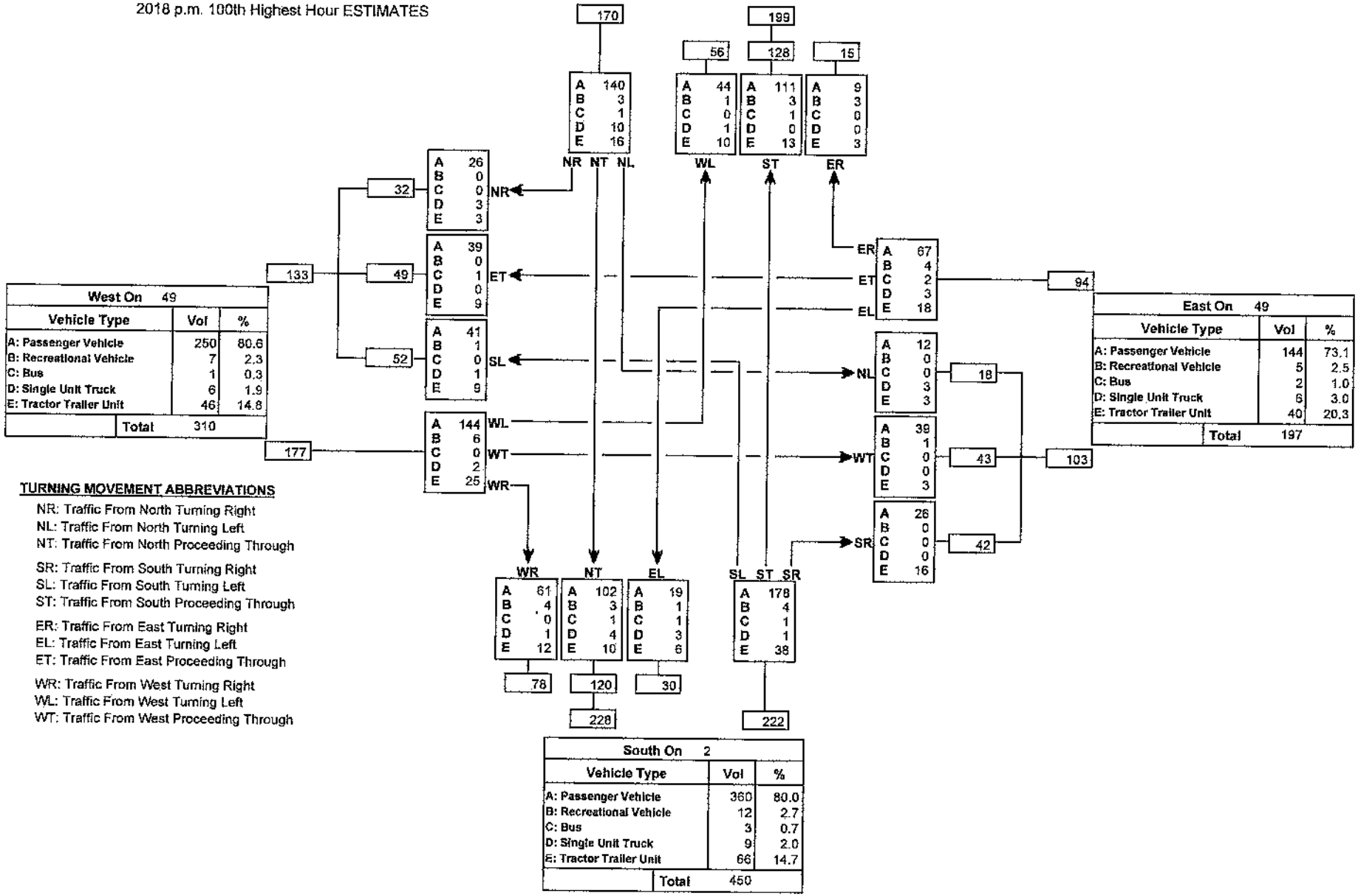


### TURNING MOVEMENT ABBREVIATIONS

NR: Traffic From North Turning Right
NL: Traffic From North Turning Left
NT: Traffic From North Proceeding Through

SR: Traffic From South Turning Right
SL: Traffic From South Turning Left
ST: Traffic From South Proceeding Through

ER: Traffic From East Turning Right
EL: Traffic From East Turning Left
ET: Traffic From East Proceeding Through

WR: Traffic From West Turning Right
WL: Traffic From West Turning Left
WT: Traffic From West Proceeding Through

C

Comparison of Mill Rate, Debt Load, and Property Taxes - Alberta

| City | Residential Tax Rate | Non-residential Tax Rate | Debt Limit | Actual Debt | % Debt | Average House | Tax Average |
|---|---|---|---|---|---|---|---|
| | 2018 | 2018 | 2018 | 2018 | Limit Used | | |
| Grande Prairie | 10.2087 | 16.374 | 275,629,461 | 140,139,518 | 51% | $ 325,175 | $ 3,320 |
| Town of McLennan | 19 | 29 | 2,657,594 | 237,967 | | $ 50,000 | |
| Village Giriouxville | 16.123 | 16.123 | 1,148,993 | 347,072 | | $ 50,000 | |
| Town of Falher | 12.17 | 15.661 | 4,631,556 | 268,872 | 0% | $ 140,000 | |
| Village Donnelly | 8.7096 | 12.8536 | 1,294,670 | 326,525 | | $ 50,000 | |
| Village of Berwyn | 12.03 | 28.5342 | 1,312,328 | 0 | | $ 125,000 | $ 1,504 |
| MD of Peace | 4.3405 | 13.77 | 6,349,998 | 0 | | | |
| Town of Peace River | 8.9628 | 16.2943 | 37,582,985 | 21,620,918 | | $ 300,000 | |
| Town of Grimshaw | 7.9128 | 10.8199 | 8,018,177 | 0 | 0% | $ 245,000 | $ 1,939 |
| MD Fairview | 8.5 | 20.5 | 9,335,466 | 0 | 0% | | $ - |
| MD Smoky River | 5.3 | 16.308 | 17,056,131 | 1,750,880 | 10% | | $ - |
| Village Hines Creek | 17.11 | 36.72 | 2,188,863 | 0 | | $ 190,000 | |
| Clear Hills County | 1.3022 | 14.6459 | 24,814,376 | 390,584 | 2% | | $ - |
| Town of Fairview | 9.85 | 14.65 | 11,068,374 | 2,413,206 | 22% | $ 235,000 | $ 2,315 |
| Birch Hills County | 10.3763 | 18.1823 | 10,635,722 | 0 | 0% | | $ - |
| MD Spirit River | 7.2 | 15.527 | 6,504,144 | 0 | 0% | | $ - |
| Town of Spirit River | 11.0886 | 13.5071 | 5,408,976 | 909,926 | 17% | $ 190,000 | $ 2,107 |
| Saddle Hills County | 3.8672 | 12.6 | 54,103,317 | 0 | 0% | | $ - |
| Village of Rycroft | 10.041 | 20.91 | 2,447,297 | 1,200,001 | 49% | $ 150,000 | $ 1,506 |
| Village Nampa | 5.48 | 14.23 | 3,708,716 | 1,992,048 | | $ 290,000 | |
| Northern Sunrise | 5 | 13 | 49,782,237 | 9,107,212 | | | |
| Town Beaverlodge | 5.8927 | 12.4432 | 9,441,998 | 6,119,110 | | $ 265,000 | |
| County of GP | 4.04436 | 13.4765 | 155,428,353 | 59,231,120 | 38% | $ 400,000 | $ 1,618 |
| Town of Wembley | 7.4539 | 10.8091 | 4,097,720 | 42,332 | 1% | | $ - |
| Village Hythe | 7.639 | 17.2672 | 2,399,436 | 309,200 | | $ 100,000 | |
| County Northern L. | 6.2016 | 14.0093 | 26,760,116 | 14,398,977 | | | |
| Town of Manning | 11.4225 | 14.2402 | 6,491,204 | 1,491,420 | | $ 200,000 | |
| MD Greenview | 2.7 | 7.828 | 156,727,652 | 1,101,549 | | | |
| Town High Prairie | 9.8079 | 14.3616 | 14,582,142 | 2,866,315 | | $ 250,000 | |

| | | | | | | | |
|---|---|---|---|---|---|---|---|
| County Big Lakes | 4.305 | 14.5 | 39,877,454 | 3,220,197 | | | |
| Town Valleyview | 8.5 | 15.5503 | 17,408,646 | 5,295,982 | | $ 285,000 | |
| Town Fox Creek | 7.434 | 13.4853 | 17,615,666 | 10,958,325 | | $ 290,000 | |
| Town of Sexsmith | 7.5777 | 16.4687 | 6,471,018 | 2,356,207 | 36% | $ 260,000 | $ 1,970 |
| Sources: AB Municipal Affairs and CMHC 2011 House Prices, Royal LePage | | | | | | | |

D

PREDA

PEACE REGION ECONOMIC DEVELOPMENT ALLIANCE

# RETAIL TRADE AREA PROFILE

## municipal district of spirit river, saddle hills county, town of spirit river & village of rycroft

SEPTEMBER 2016

Prepared by:

CUSHING TERRELL ARCHITECTURE INC.

# m.d. of spirit river, saddle hills county, town of spirit river & village of rycroft

## Town of Spirit River Drive Time Map

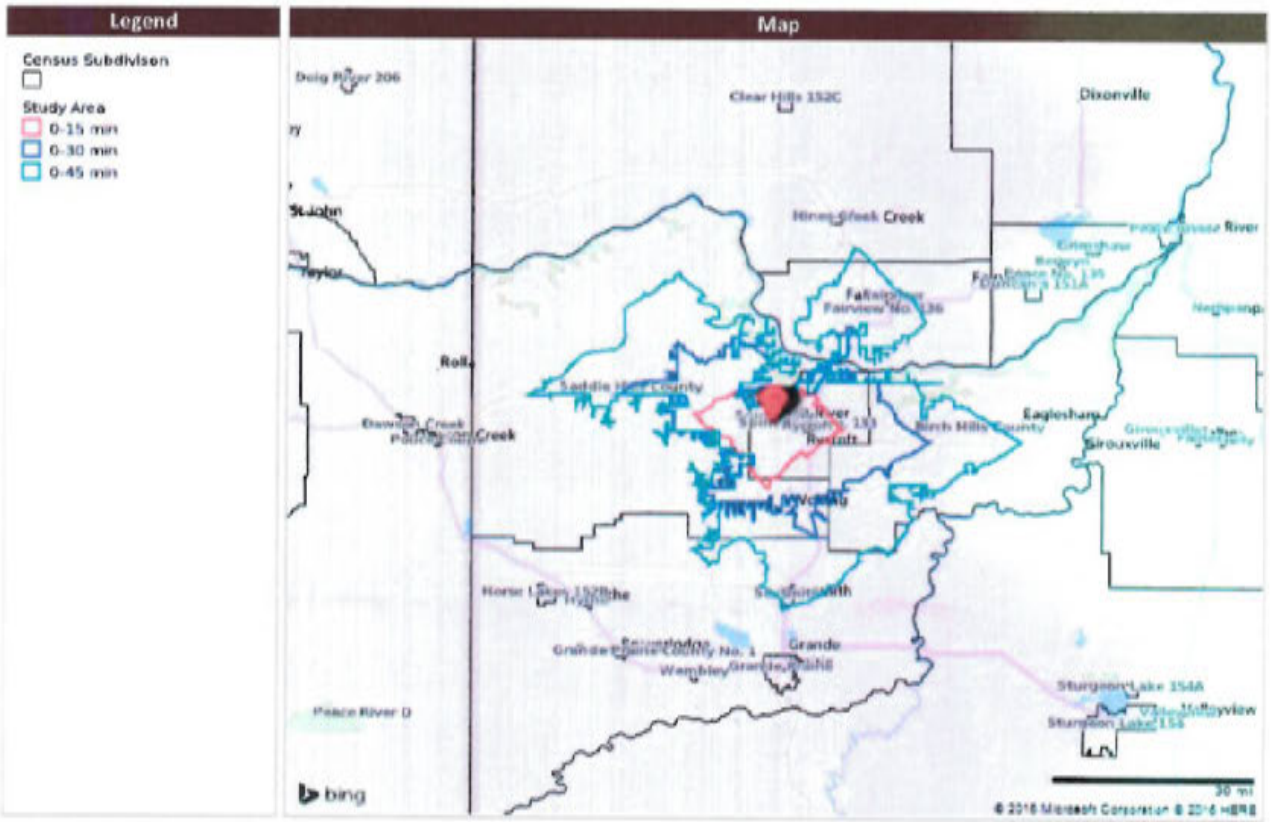

# m.d. of spirit river, saddle hills county, town of spirit river & village of rycroft

## Town of Spirit River Snapshot

### RETAIL SPENDING PER HOUSEHOLD

| Annual Household Expenditures per Household | |
|---|---|
| Grocery & Specialty Foods | $6,342 |
| Full & Quick Service Restaurants | $7,543 |
| Home & Personal Electronics & Appliances | $2,386 |
| Personal Services | $1,253 |
| Specialty Retail | $900 |
| Home Improvement & Gardening | $716 |
| Home Furnishings & Accessories | $1,005 |
| Clothing & Apparel | $1,863 |
| Footwear | $591 |
| Jewelry & Accessories | $300 |
| Pharmacy | $900 |
| Health & Beauty | $567 |
| Books & Multimedia | $494 |
| Toys & Hobbies | $290 |
| Sporting Goods & Recreation | $327 |
| Entertainment & Leisure | $827 |
| Alcohol & Tobacco | $1,755 |
| Auto Parts & Accessories | $157 |
| Auto/RV/Motorsports Dealerships | $4,670 |

### POPULATION & HOUSEHOLD SUMMARY

| | 0-15 min | Town of Spirit River |
|---|---|---|
| 2011 Census | 2,237 | 1,025 |
| 2016 Population Estimate | 2,216 | 1,040 |
| 2019 Population Projection | 2,147 | 998 |
| % Population Change (2011-16) | -0.9% | 1.5% |
| % Population Change (2016-19) | -3.1% | -4.0% |
| 2016 Occupied Private Dwellings by T | 946 | 434 |
| Owner | 782 | 303 |
| Renter | 164 | 131 |
| Persons per household | 2.3 | 2.4 |

#### % Population Change

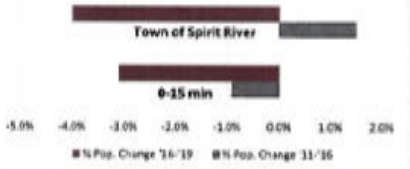


#### % Dwelling Type - 0-15 min

### INCOME

| | 0-15 min | Town of Spirit River |
|---|---|---|
| Under $20K | 166 | 92 |
| $20 - $40K | 158 | 60 |
| $40 - $60K | 186 | 57 |
| $60 - $80K | 132 | 51 |
| $80 - $100K | 93 | 48 |
| $100 - $125K | 68 | 41 |
| $125 - $150K | 45 | 29 |
| $150 - $175K | 29 | 18 |
| $175 - $200K | 21 | 12 |
| $200 - $250K | 19 | 9 |
| $250K + | 29 | 17 |
| Median Household Income | $ 56,227 | $ 63,137 |

#### % Households by Income - 0-15 min

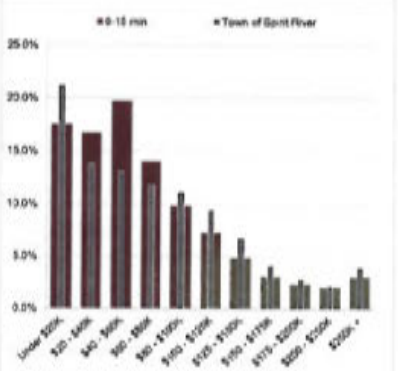


### AGE

| | 0-15 min | Town of Spirit River |
|---|---|---|
| Population by Age | 2,215 | 1,040 |
| 0 to 4 years | 124 | 49 |
| 5 to 19 years | 362 | 170 |
| 20 to 24 years | 92 | 50 |
| 25 to 34 years | 253 | 109 |
| 35 to 44 years | 265 | 127 |
| 45 to 54 years | 325 | 141 |
| 55 to 64 years | 331 | 138 |
| 65 to 74 years | 221 | 107 |
| 75 to 84 years | 148 | 77 |
| 85 years and over | 95 | 72 |
| Median Age | 45.4 | 46.0 |

#### % Age - 0-15 min

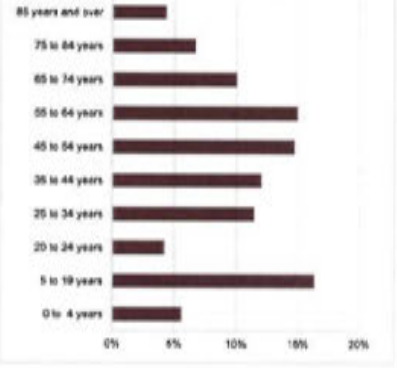


### LABOR FORCE & OCCUPATIONS

| | | 0-15 min | Town of Spirit River |
|---|---|---|---|
| Labour Force by Organization | | 1,217 | 535 |
| A | Management | 177 | 11 |
| B | Business & Finance | 81 | 42 |
| C | Natural Sciences | 0 | 0 |
| D | Health | 13 | 13 |
| E | Educ, Gov't, & Religion | 55 | 55 |
| F | Art, Culture, Rec, & Sport | 0 | 0 |
| G | Sales & Service | 438 | 222 |
| H | Trades & Transportation | 397 | 192 |
| I | Primary Industry | 60 | 0 |
| J | Processing & Manufacturing | 17 | 0 |
| K | Not Applicable | 0 | 0 |

#### % Occupations - 0-15 min

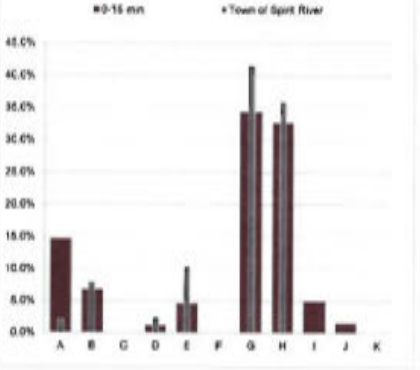


### EDUCATIONAL ATTAINMENT

Population 25-64 yrs

| | 0-15 min | Town of Spirit River |
|---|---|---|
| Population 25-64 yrs | 1,175 | 6,803 |
| A - No cert., dipl. or degree | 286 | 1,249 |
| B - HS or equivalent | 305 | 1,762 |
| C - Apprenticeship or trades | 227 | 1,588 |
| D - College, CEGEP | 294 | 1,553 |
| E - Univ. cert or dipl (not Bach) | 0 | 52 |
| F - Bachelor's degree | 61 | 575 |
| G - Graduate | 1 | 23 |

#### % Educational Attainment - 0-15 min

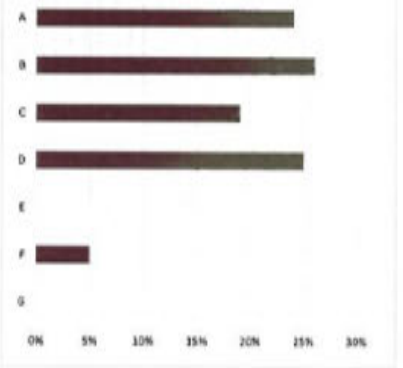

# m.d. of spirit river, saddle hills county, town of spirit river & village of rycroft

Town of Spirit River Population 2011 (Federal Census): 1,025

Town of Spirit River Population Estimate 2016: 1,040 | Population Forecast Estimate 2019: 998

Town of Spirit River Population Growth 2016 - 2019: -4.0%

Town of Spirit River Avg Household Income: $88,378

Town of Spirit River Avg Persons per Household: 2.2

Total Retail Spending: 15-min Drive Time $25.7 M | 30-min Drive Time $39.5 M | 45-min Drive Time $152.3 M

30-Minute Drive Time Retail Inventory Estimate: 75,100 sf

30-Minute Drive Time Current Retail Space Per Capita Ratio: 21.4 sf/capita

Combined, the Municipal District of Spirit River and Saddle Hills County comprise a land area of around 650,000 hectares. A major theme of the M.D. of Spirit River's Municipal Development Plan (MDP) is for commercial development to be directed towards specific locations near highways and settlements. Similarly, in Saddle Hills County's MDP, it is stated that commercial and industrial development is intended in suitable locations, with both plans emphasizing the preservation of the peaceful and rural qualities of the area.

Highways that run through the M.D. of Spirit River and are intended for commercial development include Highways 2, 49, and 731. Communities within the Municipal District of Spirit River and Saddle Hills County include the Town Spirit River and Village of Rycroft, which provide a range of retail services including Grocery, Clothing & Apparel, and Home Improvement & Gardening, mainly located in downtown areas. Both communities have zoning within their respective Land Use Bylaws regulating retail development for downtown and highway areas.

## Town of Spirit River Expenditures (2016 Estimates)

| | Key Demographics | 0-15 min $ / HHld / Yr | 0-30 min $ / HHld / Yr | 0-45 min $ / HHld / Yr | Spirit River | Alberta |
|---|---|---|---|---|---|---|
| ANNUAL EXPENDITURES PER HOUSEHOLD | Grocery & Specialty Foods | $6,342 | $6,389 | $6,968 | $6,774 | $7,914 |
| | Full & Quick Service Restaurants | $1,789 | $1,721 | $1,865 | $2,011 | $2,352 |
| | Home & Personal Electronics & Appliances | $2,386 | $2,382 | $2,797 | $2,557 | $3,267 |
| | Personal Services | $1,253 | $1,293 | $1,430 | $1,314 | $1,649 |
| | Specialty Retail | $900 | $861 | $1,012 | $967 | $953 |
| | Home Improvement & Gardening | $716 | $803 | $868 | $666 | $793 |
| | Home Furnishings & Accessories | $1,005 | $1,041 | $1,640 | $1,136 | $2,064 |
| | Clothing & Apparel | $1,863 | $1,906 | $2,142 | $2,030 | $2,766 |
| | Footwear | $591 | $580 | $654 | $643 | $787 |
| | Jewelry & Accessories | $300 | $285 | $360 | $355 | $515 |
| | Pharmacy | $900 | $955 | $921 | $902 | $829 |
| | Health & Beauty | $567 | $552 | $621 | $641 | $755 |
| | Books & Multimedia | $494 | $454 | $489 | $550 | $589 |
| | Toys & Hobbies | $290 | $275 | $340 | $307 | $402 |
| | Sporting Goods & Recreation | $327 | $312 | $383 | $370 | $461 |
| | Entertainment & Leisure | $827 | $837 | $1,095 | $1,057 | $1,568 |
| | Alcohol & Tobacco | $1,755 | $1,712 | $1,885 | $1,803 | $1,733 |
| | Auto Parts & Accessories | $157 | $178 | $205 | $145 | $162 |
| | Auto/RV/Motorsports Dealerships | $4,670 | $5,423 | $6,013 | $3,935 | $5,494 |

# m.d. of spirit river, saddle hills county, town of spirit river & village of rycroft

## Town of Spirit River Population Profile

| | Key Demographics | 0-15 min | | 0-30 min | | 0-45 min | | Spirit River | Alberta |
|---|---|---|---|---|---|---|---|---|---|
| | | Count | % | Count | % | Count | % | | |
| POPULATION | 2011 Census | 2,237 | | 3,511 | | 12,243 | | 1,025 | 3,790,185 |
| | 2016 Population Estimate | 2,216 | | 3,518 | | 12,760 | | 1,040 | 4,191,020 |
| | 2019 Population Projection | 2,147 | | 3,430 | | 12,775 | | 998 | 4,346,671 |
| | % Population Change (2011-16) | -0.9% | | 0.2% | | 4.2% | | 1.5% | 10.6% |
| | % Population Change (2016-19) | -3.1% | | -2.5% | | 0.1% | | -4.0% | 3.7% |
| HOUSEHOLDS | 2016 Households | 946 | | 1,413 | | 4,806 | | 434 | 1,611,399 |
| | Change in Households (percent) | | | | | | | | |
| | 2016 to 2019 | -2.7% | | -2.2% | | 0.6% | | -3.5% | 4.3% |
| | 2019 to 2021 | -1.9% | | -1.5% | | 0.4% | | -2.6% | 3.2% |
| | 2021 to 2026 | -4.6% | | -3.7% | | 1.4% | | -6.2% | 7.5% |
| | Persons per household | 2.3 | | 2.5 | | 2.7 | | 2.4 | 2.6 |
| | 2016 Total Household Maintainers | 946 | | 1,413 | | 4,806 | | 434 | 1,611,399 |
| | Under 25 years | 19 | 2% | 37 | 3% | 231 | 5% | 10 | 76,592 |
| | 25 to 34 years | 118 | 12% | 153 | 11% | 828 | 17% | 48 | 311,692 |
| | 35 to 44 years | 138 | 15% | 212 | 15% | 821 | 17% | 52 | 333,715 |
| | 45 to 54 years | 190 | 20% | 304 | 22% | 986 | 21% | 95 | 322,220 |
| | 55 to 64 years | 192 | 20% | 343 | 24% | 897 | 19% | 80 | 299,121 |
| | 65 to 74 years | 113 | 12% | 155 | 11% | 542 | 11% | 37 | 163,708 |
| | 75 years and over | 176 | 19% | 208 | 15% | 500 | 10% | 112 | 104,351 |
| FAMILIES | 2016 Families | 646 | | 1,025 | | 3,702 | | 289 | 193,721 |
| | Married couples | 475 | 74% | 776 | 76% | 2,799 | 76% | 212 | 161,643 |
| | Without children at home | 270 | 42% | 426 | 42% | 1,331 | 36% | 119 | 117,548 |
| | With children at home | 205 | 32% | 350 | 34% | 1,468 | 40% | 93 | 85,309 |
| | Common-law couples | 88 | 14% | 130 | 13% | 500 | 14% | 37 | 67,047 |
| | Without children at home | 30 | 5% | 54 | 5% | 235 | 6% | 15 | 95,943 |
| | With children at home | 59 | 9% | 76 | 7% | 264 | 7% | 22 | 90,723 |
| | Lone-parent families | 82 | 13% | 119 | 12% | 404 | 11% | 40 | 90,723 |
| | Average Persons Per Family | 2.7 | | 2.8 | | 2.9 | | 2.7 | 2.8 |
| | Average Children Per Family | 0.9 | | 0.9 | | 1.0 | | 0.9 | 1.0 |

# m.d. of spirit river, saddle hills county, town of spirit river & village of rycroft

## Town of Spirit River & Village of Rycroft Sample Retail Inventory

The following provides a representative sampling of some of the notable retailers currently in the Town of Spirit River and Village of Rycroft. For a full listing of retail businesses including local independent operators in the community, please refer to the detailed Business Listing as provided by the municipalities.

Fields (General Merchandise)

Co-op (Grocery & Specialty Foods)

IGA Spirit River (Grocery & Specialty Foods)

Home Hardware (Home Improvement & Gardening)

ATB Financial (Personal Services)

RBC (Personal Services)

The Cooperators (Personal Services)

Rexall Drugstore (Pharmacy)

# m.d. of spirit river, saddle hills county, town of spirit river & village of rycroft

## M.D. of Spirit River Business Listings

| Business Name | Category |
|---|---|
| Clearcut Electrical | Electrical Contractor |
| Dunvegan Agro | Ag Chem & Fertilizer |
| Richardson Pioneer | Grain Elevator, Ag Chem & Fertilizer |
| Louis Dreyfus | Grain Elevator |
| Crop Production Services | Ag Chem & Fertilizer |
| Cargill Grain | Grain Elevator, Ag Chem & Fertilizer |
| Northern Mat and Bridge | Mat & Bridge Construction & Rental |
| HWTC Trucking | Heavy Equipment & Gravel Hauling |
| Deken Oilfield/Bremner Creek Farms | Fluid Hauling |
| Ross Chrysler | Auto & Farm Dealership |
| DFI | Piling Company |
| Rycroft Reload | Rail Trans Load Facility |
| Secure Energy Services | Rail Trans Load Facility & Treatment Facility with Disposal Well |
| Gibson Energy | Treatment Facility with Disposal Well |
| Tervita | Treatment Facility with Disposal Well and Landfill |
| CFI Industries | Fertilizer Distribution Centre and Track Unloading Facility |

# m.d. of spirit river, saddle hills county, town of spirit river & village of rycroft

## Town of Spirit River Households Profile

| | Key Demographics | 0-15 min | | 0-30 min | | 0-45 min | | Spirit River | Alberta |
|---|---|---|---|---|---|---|---|---|---|
| | | Count | % | Count | % | Count | % | | |
| HOUSEHOLDS & HOUSEHOLD INCOME | Persons per household | 2.3 | | 2.4 | | 2.6 | | 2.2 | 2.5 |
| | Number of Households | 946 | | 1,413 | | 4,806 | | 434 | 1,611,399 |
| | Under $5,000 | 23 | 2.5% | 32 | 2.3% | 82 | 1.7% | 9 | 22,006 |
| | $5,000 to 9,999 | 30 | 3.1% | 45 | 3.2% | 104 | 2.2% | 16 | 26,596 |
| | $10,000 to 14,999 | 47 | 4.9% | 71 | 5.0% | 158 | 3.3% | 28 | 39,748 |
| | $15,000 to 19,999 | 66 | 7.0% | 105 | 7.4% | 228 | 4.7% | 39 | 58,832 |
| | $20,000 to 29,999 | 82 | 8.6% | 136 | 9.7% | 327 | 6.8% | 35 | 88,640 |
| | $30,000 - 39,999 | 76 | 8.1% | 120 | 8.5% | 344 | 7.2% | 25 | 94,720 |
| | $40,000 - 49,999 | 89 | 9.4% | 122 | 8.6% | 379 | 7.9% | 26 | 101,078 |
| | $50,000 to 59,999 | 97 | 10.3% | 127 | 9.0% | 399 | 8.3% | 31 | 103,165 |
| | $60,000 - 79,999 | 132 | 14.0% | 190 | 13.4% | 607 | 12.6% | 51 | 173,266 |
| | $80,000 - 99,999 | 93 | 9.8% | 143 | 10.1% | 586 | 12.2% | 48 | 182,137 |
| | $100,000 - 124,999 | 68 | 7.2% | 105 | 7.5% | 531 | 11.0% | 41 | 193,721 |
| | $125,000 - 149,999 | 45 | 4.8% | 68 | 4.8% | 379 | 7.9% | 29 | 161,643 |
| | $150,000 - 174,999 | 29 | 3.0% | 43 | 3.1% | 238 | 5.0% | 18 | 117,548 |
| | $175,000 - 199,999 | 21 | 2.3% | 31 | 2.2% | 155 | 3.2% | 12 | 85,309 |
| | $200,000 - 249,999 | 19 | 2.0% | 27 | 1.9% | 114 | 2.4% | 9 | 67,047 |
| | $250,000 and over | 29 | 3.0% | 46 | 3.3% | 175 | 3.7% | 17 | 95,943 |
| | Median Household Income | $ 56,227 | | $ 55,906 | | $ 72,635 | | $ 63,137 | $ 90,723 |
| | Average Household Income | $ 79,987 | | $ 80,542 | | $ 95,645 | | $ 88,378 | $ 119,320 |
| VISIBLE MINORITIES | Total Visible Minority Population | 14 | 1.0% | 33 | 1.0% | 269 | 2.0% | 0 | 765,658 |
| | South Asian | 0 | 0.0% | 1 | 0.0% | 87 | 1.0% | 0 | 193,810 |
| | Chinese | 0 | 0.0% | 1 | 0.0% | 1 | 0.0% | 0 | 170,080 |
| | Black | 0 | 0.0% | 1 | 0.0% | 1 | 0.0% | 0 | 84,832 |
| | Filipino | 1 | 0.0% | 6 | 0.0% | 101 | 1.0% | 0 | 129,122 |
| | Latin American | 13 | 1.0% | 24 | 1.0% | 24 | 0.0% | 0 | 43,357 |
| | Arab | 0 | 0.0% | 0 | 0.0% | 28 | 0.0% | 0 | 39,223 |
| | Southeast Asian | 0 | 0.0% | 0 | 0.0% | 0 | 0.0% | 0 | 45,484 |
| | West Asian | 0 | 0.0% | 0 | 0.0% | 0 | 0.0% | 0 | 16,173 |
| | Korean | 0 | 0.0% | 0 | 0.0% | 0 | 0.0% | 0 | 16,036 |
| | Japanese | 0 | 0.0% | 0 | 0.0% | 26 | 0.0% | 0 | 8,296 |
| | Visible minority, n.i.e. | 0 | 0.0% | 0 | 0.0% | 0 | 0.0% | 0 | 4,037 |
| | Multiple visible minorities | 0 | 0.0% | 0 | 0.0% | 0 | 0.0% | 0 | 15,208 |
| | Not a visible minority | 2,120 | 98.0% | 3,291 | 99.0% | 12,015 | 97.0% | 963 | 3,341,205 |

## Stats Canada & Visible Minorities

The *Employment Equity Act* defines visible minorities as "persons, other than Aboriginal peoples, who are non-Caucasian in race or non-white in colour" (http://www12.statcan.gc.ca/nhs-enm/2011/ref/dict/pop127-eng.cfm).
In Pitney Bowes' reports, Aboriginal peoples are listed under *Ethnic Origins* rather than *Visible Minorities*. Due to the specific reports used in this study that do not include *Ethnic Origins*, Aboriginal peoples counts are not included, but can be approximately deduced by subtracting Total Visible Minorities from the Total Population Estimate.

# m.d. of spirit river, saddle hills county, town of spirit river & village of rycroft

## Town of Spirit River Labour Profile

| | Key Demographics | 0-15 min | | 0-30 min | | 0-45 min | | Spirit River | Alberta |
|---|---|---|---|---|---|---|---|---|---|
| | | Count | % | Count | % | Count | % | | |
| LABOUR FORCE & OCCUPATIONS | Age 15+ by Labour Force Activity | 1,769 | | 2,691 | | 9,537 | | 802 | 3,338,043 |
| | In the labour force | 1,217 | 68.8% | 1,914 | 71.1% | 6,628 | 69.5% | 535 | 2,396,406 |
| | Not in the labour force | 552 | 31.2% | 777 | 28.9% | 2,909 | 30.5% | 267 | 941,637 |
| | Participation Rate | 68.8% | | 71.1% | | 69.5% | | 66.7% | 71.8% |
| | | | | | | | | | |
| | Labour Force by Occupation | 1,217 | | 1,914 | | 6,628 | | 535 | 2,396,406 |
| | Management | 177 | 14.6% | 432 | 22.6% | 1,242 | 18.7% | 11 | 271,959 |
| | Business & Finance | 81 | 6.7% | 198 | 10.4% | 1,060 | 16.0% | 42 | 441,775 |
| | Natural Sciences | 0 | 0.0% | 0 | 0.0% | 70 | 1.1% | 0 | 177,395 |
| | Health | 13 | 1.1% | 13 | 0.7% | 150 | 2.3% | 13 | 106,103 |
| | Educ, Gov't, & Religion | 55 | 4.5% | 55 | 2.9% | 305 | 4.6% | 55 | 221,004 |
| | Art, Culture, Rec, & Sport | 0 | 0.0% | 0 | 0.0% | 0 | 0.0% | 0 | 13,199 |
| | Sales & Service | 418 | 34.3% | 509 | 26.6% | 1,200 | 18.1% | 222 | 580,832 |
| | Trades & Transportation | 397 | 32.6% | 543 | 28.4% | 1,995 | 30.1% | 192 | 502,748 |
| | Primary Industry | 60 | 4.9% | 138 | 7.2% | 528 | 8.0% | 0 | 43,414 |
| | Processing & Manufacturing | 17 | 1.4% | 25 | 1.3% | 78 | 1.2% | 0 | 32,685 |
| | Not Applicable | 0 | 0.0% | 0 | 0.0% | 0 | 0.0% | 0 | 5,292 |
| | | | | | | | | | |
| HOUSING & DWELLINGS | Private Dwellings by Structure Type | 946 | | 1,413 | | 4,806 | | 434 | 1,611,399 |
| | Single-detached house | 823 | 87.0% | 1,209 | 85.6% | 3,991 | 83.1% | 361 | 1,020,844 |
| | Semi-detached house | 5 | 0.5% | 5 | 0.4% | 44 | 0.9% | 5 | 85,511 |
| | Row house | 33 | 3.5% | 33 | 2.3% | 114 | 2.4% | 22 | 113,977 |
| | Apartment; < 5 storeys | 20 | 2.1% | 24 | 1.7% | 179 | 3.7% | 15 | 228,899 |
| | Apartment; 5+ storeys | 0 | 0.0% | 0 | 0.0% | 0 | 0.0% | 0 | 71,868 |
| | Apartment; duplex | 5 | 0.5% | 5 | 0.4% | 52 | 1.1% | 0 | 37,800 |
| | Single-attached house | 0 | 0.0% | 0 | 0.0% | 17 | 0.4% | 0 | 1,032 |
| | Movable dwelling | 59 | 6.3% | 137 | 9.7% | 408 | 8.5% | 31 | 51,468 |
| | | | | | | | | | |
| | Private Dwellings by Tenure | 946 | | 1,413 | | 4,806 | | 434 | 1,611,399 |
| | Owner | 782 | 82.7% | 1,220 | 86.4% | 4,014 | 83.5% | 303 | 1,208,241 |
| | Renter | 164 | 17.3% | 192 | 13.6% | 791 | 16.5% | 131 | 391,435 |
| | Band housing | 0 | 0.0% | 0 | 0.0% | 0 | 0.0% | 0 | 11,723 |

E

# Property tax incentives

# For municipalities

## Overview

The proposed legislation amends the *Municipal Government Act* (MGA) to allow municipalities to offer property tax incentives for non-residential properties to attract investment and development.

Municipalities in Alberta currently have very limited and specific authorities with respect to tax forgiveness. Councils can cancel, defer, or refund property taxes for specific properties in a specific year to provide relief to owners in cases of hardship.

The act also enables municipalities to provide multi-year tax incentives to encourage redevelopment of brownfield properties. Expanding these existing authorities to provide incentives for broader economic development purposes, and for durations of up to 15 years, will attract investment and provide longer-term certainty for businesses.

## Summary of legislative components

| Proposed amendment | Explanation |
|---|---|
| Specifies that if land with an existing tax incentive is part of an annexation, the receiving municipality will need to continue the exemption or deferral, subject to the terms and conditions of the incentive approval. | Provides certainty for property owners that any tax incentive provided will remain in effect after an annexation, provided the property owner continues to meet the necessary conditions. |
| Requires that tax incentives be included on the assessment and tax rolls, and that corrections and amended notices are issued to reflect new tax incentives. | Provides public transparency regarding what properties received tax incentives, and ensures that assessed persons receive notice of changes resulting from new tax incentives.<br><br>This mirrors requirements that are already in place for other types of property tax exemptions. |
| Enables municipalities to, by bylaw, provide multi-year property tax incentives (full or partial exemptions, or deferral of taxes) for non-residential properties for the purpose of encouraging development or revitalization for the general benefit of the municipality. | Streamlines the process for offering tax incentives by allowing council to establish property tax incentives through a single bylaw that creates parameters and criteria for tax incentives, rather than requiring a council resolution or bylaw for each individual property. |

©2018 Government of Alberta | Published: June 2019 |

Alberta

| Proposed amendment | Explanation |
|---|---|
| Requires that a bylaw:<br>o Establish eligibility criteria<br>o Establish an application process<br>o Include a maximum time period of 15 years (with the option for renewal)<br>o Provide a process for council review of an application decision made by a delegated official | Eligibility criteria and clear application processes enhance public transparency and accountability.<br><br>Limiting the length of the incentive helps protect the interests of other property taxpayers in the municipality, while remaining competitive with other jurisdictions.<br><br>Designating council as the appeal body for staff decisions respects the role of council as the municipality's policy decision maker. |
| Requires a written decision be issued that outlines the applicable tax years, the extent of the exemption, and any conditions of the approval (or alternatively the reasons for a refusal, and a deadline for council review of the decision). | Provides transparency for the applicant in the case of approval or refusal. |
| Enables cancellation of the incentive if criteria in the bylaw or conditions of the approval are not met. | Including conditions mitigates the risk that a property owner does not follow through on commitments to develop or economically revitalize the property. |
| Specifies that the provincial assessor must be notified if a tax incentive is given for designated industrial property. | Enables the provincial assessor to properly assess and tax designated industrial properties. |
| Specifies that approved incentives are unaffected if the tax incentive bylaw is later amended or repealed. | Provides certainty to property owners that their incentives will remain in place even if there are future changes to the program. |
| Requires that applications for judicial review of decisions regarding tax incentives must be filed within 60 days of the decision date. | Reduces the default timeline of 6 months (under the Alberta Rules of Court) to provide property owners and the municipality with swifter resolution of any disputes. |
| Specifies that individual councillors or other delegated persons are protected against court costs when making a tax incentive decision. | This is a standard clause that protects the individuals making the decisions on behalf of the municipality. |
| Specifies that Assessment Review Boards and Composite Assessment Review Boards do not have jurisdiction to review complaints regarding these tax incentives. | Recognizes that councils are best suited to determine what incentives will result in benefits to the municipality, and upholds council discretion to decide what developments and revitalization efforts will meet the needs of their municipality.<br><br>Note: these provisions do not limit the ability to make complaints to the Boards regarding other aspects of a property assessment. |

©2018 Government of Alberta | Published: June 2019 |

# Municipal tax incentives
# Questions and Answers

## What does this legislation do to allow municipal tax incentives?

The proposed amendments to the *Municipal Government Act* will enable municipalities to offer multi-year tax exemptions, reductions or deferrals for non-residential properties, to attract investment, development, and revitalization. Municipal councils will be able to pass bylaws establishing tax incentive programs. Property owners, or prospective property owners, will apply to the municipality.

## What are the benefits?

Many municipalities are struggling to attract business and boost economic development and revitalization. Tax incentives will lower the financial burden on businesses, and will help municipalities attract investment. This legislation will help Alberta municipalities create business investment climates that can compete with other communities across both Canada and the United States, where property tax incentives are already available.

## How do municipalities implement this?

Council will need to pass a bylaw that outlines the types of property tax incentives that will be available in their municipality. The bylaw will define the types of development and revitalization that will be eligible to receive these incentives, the criteria and conditions for approval, and will outline the application process. Property owners will then apply to the municipality to receive the incentive.

## How is this different from what municipalities can do now?

The *Municipal Government Act* currently enables councils to cancel or refund all or a portion of a property tax, or defer the collection of a tax in a specific year for the purposes of providing tax relief in instances of hardship. The act also allows municipalities to provide multi-year tax incentives to encourage redevelopment of brownfield properties. This legislation will expand the existing authority to include broader economic development purposes.

## What about the municipalities that already offer these types of incentives?

In rare circumstances, some Alberta municipalities may have used their existing tax cancellation, reduction, and deferral authorities to offer incentive programs. These municipalities may need to pass new bylaws under the new legislation to ensure that their programs are in alignment.

## Can these incentives be used for existing businesses, or just new development?

The proposed legislation is enabling, and leaves that determination to local councils.

©2018 Government of Alberta | Published: June 2019 |

Alberta

## How does the public get involved?

These programs are established through a bylaw, which requires three readings, and ensures that the citizens are aware of the proposed program. In addition, the *Municipal Government Act* requires that every municipality must adopt a Public Participation Policy, setting out the local council's approach to public engagement. Residents can speak to their local municipal office to find out more about public participation opportunities within their municipality.

## Can the municipal tax incentives be appealed?

Municipalities may choose to designate decisions on applications to municipal staff. These decisions can be appealed to council. Decisions can also be judicially reviewed, with a shortened timeline of 60 days to provide property owners and municipalities with quick resolution of any disputes.

## How will these programs work with existing trade agreements?

Any non-residential property that meets the criteria and conditions outlined in the bylaw will be eligible to apply for a tax incentive – this gives all property owners equal opportunity to receive a tax incentive, and prevents discrimination against businesses from other provinces. British Columbia and Saskatchewan both provide for similar tax incentive programs.

©2018 Government of Alberta | Published: June 2019 |

Alberta

F

## Request for Decision or Allocation of Funds

**Agenda item**: Village of Rycroft Entrepreneurial Business Case Grant

**Request to Council:** We are proposing a $4,000 grant (two grants of $2,000 each) to pay for mentoring and assistance in developing a business case for a business proposing to develop in the Village of Rycroft.

**Background**: The Village of Rycroft is working on an economic development strategy in an effort to encourage development in the Village. Through this process we have identified that developing local entrepreneurs to invest in our Village is a valuable practice. Entrepreneurs can utilize the Community Futures for basic assistance to develop a business plan. However, often people give up because they don't fully understand the process. Offering two $2,000 grants to pay towards a mentor for the business plan will help better prepare individuals to move forward with their business idea and better reflect the probability of success.

**Considerations:** The grant would only be for Village of Rycroft residents for businesses proposed in the village of Rycroft. The Village of Rycroft would hold an open competition and the newly formed economic development committee would review the applications and select the best two.

The grant agreement would be with Deb Kalen, (the business development officer at Community Futures in Peace River). Deb would be paid directly by the Village of Rycroft once the business plan is complete to ensure the process is followed. Any costs beyond the $2,000 would be at the entrepreneurs cost.

Successful applicants must present their business plan to the Village of Rycroft Council The successful applicants would have sole ownership of the business plan for one-year. If they have not moved forward with implementing the plan within the first year from the date of completion, the plan is the property of the Village of Rycroft to market to other entrepreneurs.

**Risks**

There may be applications from outside the Village proposed for a business in the Village. These would not be eligible. Another risk is someone may use the grant and develop a business elsewhere. Also, some may not move forward after going through the process.

**Village of Rycroft Council Decision:** That the Rycroft Council approve and develop a grant application and review process.

2019

Village of Rycroft Community Beautification Program

Yard of the Month Contest

It doesn't matter if you have a green thumb, just a rake, or shovel r weed trimmer or mower. Let the competition begin. It's Spring and time to clean up your yard. It's amazing what a quick lawn mowing, weed trimming, yard tidying and flower planting can do.

Drop by the Village office and fill out an entry form complete with photos of your yard in the Village of Rycroft. There is even a commercial property category.

Each month of the summer one property will be selected to receive a gift basket with local products or services. A photo of your yard will also appear on our website and in the local paper.

Let's work together to make Rycroft a beautiful place to live.

H

| Alberta 2018 Exports (Thousands of $CA) - Top 25 Products | | |
|---|---|---|
| 270900 - Crude Petroleum Oils and Oils Obtained from Bituminous Minerals | $ | 72,445,165 |
| 271121 - Natural Gas in Gaseous State | $ | 6,872,453 |
| 390140 - Ethylene-alpha-olefin copolymers, having a specific gravity of less than 094 | $ | 2,785,222 |
| 100199 - Meslin and Wheat Nes: Other | $ | 2,062,099 |
| 271112 - Liquefied Petroleum or Hydrocarbon Gases - Propane | $ | 1,881,240 |
| 120510 - Rape or Colza Seeds - Low Erucic Acid (Whether or Not Broken) | $ | 1,715,976 |
| 271019 - Petroleum Oils and Oils from Bituminous Minerals, O/T Crude, O/T Light, and Preparations | $ | 1,435,463 |
| 290531 - Ethylene Glycol (Ethanediol) | $ | 1,418,789 |
| 020130 - Bovine, Cuts Boneless - Fresh or Chilled | $ | 1,323,618 |
| 440719 - Lumber, of coniferous,nes,thickness > 6 mm,sawn/chipped lengthwise/sliced/peeled | $ | 1,061,498 |
| 151411 - Rape (Canola) or Colza Oil - Low Erucic Acid - Crude | $ | 1,003,206 |
| 390120 - Polyethylene - Specific Gravity of 0.94 or More | $ | 935,810 |
| 470321 - Chemical Woodpulp - Soda or Sulphate - Coniferous, Bleached | $ | 932,569 |
| 441012 - Oriented Strand Board (Osb), of Wood | $ | 705,761 |
| 470329 - Chemical Woodpulp - Soda or Sulphate - Non-Coniferous, Bleached | $ | 605,466 |
| 230641 - Oil-Cake and Other Solid Residues - of Low Erucic Acid Rape (Canola) or Colza Seeds | $ | 570,638 |
| 290110 - Saturated Acyclic Hydrocarbons | $ | 542,754 |
| 010229 - Cattle, Other | $ | 502,201 |
| 750210 - Nickel - Unwrought, Not Alloyed | $ | 489,025 |
| 470500 - Semi-Chemical Wood Pulp | $ | 467,506 |
| 290250 - Styrene | $ | 464,771 |
| 390110 - Polyethylene - Specific Gravity of Less than 0.94 | $ | 462,494 |
| 843143 - Parts of Boring or Sinking Machinery (Whether or Not Self-Propelled) | $ | 407,645 |
| 841121 - Turbo-Propellers - Power Not Exceeding 1,100 Kw | $ | 404,542 |
| 281410 - Ammonia - Anhydrous | $ | 398,783 |
| **Sub-total** | **$** | **101,894,693** |
| Others | $ | 16,158,145 |
| **Total (All Products)** | **$** | **118,052,838** |

| Alberta 2018 - Top Trade Countries | | |
|---|---|---|
| (Thousands $CA) | | |
| United States | $ | 103,279,812 |
| China | $ | 5,142,209 |
| Japan | $ | 1,962,972 |
| Mexico | $ | 1,232,220 |
| Korea, South | $ | 554,588 |
| Indonesia | $ | 307,987 |
| Hong Kong | $ | 280,325 |
| Australia | $ | 244,799 |
| United Kingdom | $ | 243,520 |
| Netherlands | $ | 237,560 |
| Sub-total | $ | 113,485,991 |
| Others | $ | 4,566,847 |
| **Total All Countries** | **$** | **118,052,838** |

# Village of Rycroft Economic Development Committee

Definitions:

1. a. "Committee" shall mean the Village of Rycroft Economic Development Committee (VREDC).
   b. "Council" shall mean the Council of the Village of Rycroft.
   c. "Village" shall mean the Village of Rycroft.

Appointment/Term:

1. The Committee shall consist of six (6) members. The membership shall consist of:
   a. One (1) member from the Village of Rycroft Council, appointed by resolution of the council.
   b. Four (4) members-at-large from the business community of Rycroft, appointed by resolution of the council. A maximum of one (1) business member may be from a surrounding municipality.

2. a. The member of Council shall be appointed for a one (1) year term and may be reappointed.
   c. Members-at-large shall be appointed for a three (3) year term.
   d. Nothing shall preclude their reappointment for an additional three (3) year term.

3. A member of the Committee may resign at any time upon giving written notice to the Committee Chair. Such resignation shall be effective at the date and time it is received and shall be forwarded to the membership.

4. A public member at large appointed to fill a vacancy, however created, shall be ratified by a resolution of the Council. Members shall be appointed for a three (3) year term and be eligible for reappointment of an additional three (3) year term.

5. All members shall serve at the pleasure of the Council and may be removed by resolution of the Municipal Council.

Responsibility of Member Appointed by Council

6. The Councillor member appointed shall provide effective communication between the committee and council.

Disqualification

7. a. A member who is absent from three (3) consecutive regular meetings shall be disqualified from remaining as a member of the Committee.

b. A member is not disqualified under Subsection 7 (a) if the absence is authorized by a resolution of the committee and passed prior to the end of the third (3) regular meeting from which the member has been absent.

8. Time and place of meetings shall be determined by resolution of the committee. Meetings will be held on the fourth Monday of each month, or as determined by the committee.

9. Special meetings may be called by the Chairman, or by a majority of the committee members. Notice of a special meeting may be given by 24 hours' notice by telephone, by fax, by email or in person to the members' place of residence or business. Members shall provide addresses, phone number(s) and fax number(s) to the Village. A 2/3 majority of the Committee is required to hold a special meeting.

10. Committee meetings are not open to the public; however, any recommendations to the municipality may be discussed at Council meetings: confidential information will only be shared in incamera sessions.

11. The Committee shall elect a Chairman and Vice-Chairman at the first meeting.

12. A quorum of the Board shall be a majority of the Committee members appointed at the time of the meeting. (50% + 1)

13. Any decision of the Committee reached by a majority of its members present at a properly constituted meeting shall be deemed to be the decision of the Committee.

14. The Board may request the attendance, at its meetings, of any person or persons in an advisory capacity.

15. The Committee and/or Village shall not pay its members-at-large any per diem.

16. Each Committee member including the Chairman shall have one (1) vote and shall vote on all questions. In the event of a tie, the resolution is lost.

17. Members shall abstain from voting when there is an apparent conflict of interest. Members in conflict shall leave the room during the vote and discussion.

18. The Committee or Committee members have no authority to pledge the credit of the Village. Neither the Committee nor any member has any power to authorize any expenditure charged to the municipality.

19. The Committee members shall be required to sign an Oath of Confidentiality.

20. The Village may dissolve the committee at its will.

6.1

# Chief Administrative Officer report
# July 12, 2019

June 13 – Bylaw officer tour
June 14 – Water Treatment plant and aeration stone tour
June 17 – G5 Economic Development meeting
June 18 – LGAA meeting in Manning; Council meeting
June 19 – Staff meeting
June 25 - G5 General meeting
July 1 - Canada Day
July 6 - Parade

The repair/upgrade cost for the water treatment plant gears, pillow block, shaft bushing, etc. is $18,000.

We took pictures of the unsightly property on CN Rail property between highway 49 and the Village and sent a request on June 21 and 24 to have it cleaned up. We received a response from CN on June 25 that they are arranging the cleanup.

We repaired 2 water isolation valves at 49 street and 47 avenue June 26 and 27.

We encountered a computer virus and retired 2 outdated systems not worth the cost to recover and replaced with 1 new Windows 10 based system. Our outdated N_Sight software for reading our water meters was lost with the retired systems and therefore meter reads were skipped this month. Software updates are in the works and reads will be taken for the next billing cycle.

Tax penalties were applied and letters were sent to those with outstanding balances.

Canada Day Celebrations went very well as did the Parade both with a good number of participants.

Demolition of the properties on 50th, 53rd and 46th streets have commenced with anticipation of completion by early next week.

# Memorandum

To: Peter Thomas, CAO
From: Dolan Isaac, Public Works Foreman
Date: July 11/19
Re: Public Works Department Report for June 6 to July 6/19

Projects

- Valve repair project has been on hold for half of the month due to the repairs at the Water Treatment Plant,
- Demo Properties progressing as time permits, with clean up in and around each site. Scotts Excavating have been brought in under the budgeted amount to do the building knock down and removal.
- Complete a Water Loss Report with Lisa and Taylor

Water and sewer

- Lift station Pump #1 was changed out with the spare pump due wear, causing longer run times and blockages. Pulled pump was sent to Bermar Rewind for rebuild
- Tear down and replace internal parts to the damaged #14 Hydrant
- Randco finishes the repairs to the Clarifier at Water Treatment Plant June 11/19
- June 12/19 clarifier start up and realignment of the mixer gears and motor
- Hydrant Flushing completed in town
- 2 valves (isolation valve on Hydrant #14 and east side of intersection of 49st/47ave were dug and repairs made ( change out bolts and tighten packing)
- Fire pump battery was replaced

Streets

- Haul and spread 8 yards of 1.5" gravel to the asphalt ends of the service road at mikes
- Street sweeping done
- 75% of potholes filled with cold patch and continues as weather permits
- All the dig areas on 51st have been dug down 3" and filled with asphalt millings and packed, will need to be releveled from time to time until we get enough heat to bond the millings
- Curb and gutter cleaning completed along parade route and continues
- All gravel streets were graded once as needed
- Parade route Preparation done ( mowing all boulevards, curb and gutters cleaned, resweep main street and relevel millings at all dig sites on 51st

Other

- Deck lift actuator arm changed out on grass hopper. Got covered under warranty even though 2 months past warranty
- Replaced the brushes on the angle broom
- 10 Alberta One Call locates were done in the month
- A bear had been spotted on the west side of town by ball diamonds, Fish and Wildlife and RCMP were called in but bear could not be found.
- Dolan was away for a week of holidays and Tom took 2 weeks of holidays immediately after.
- Bay 1 overhead door stopped working and Northern Door did repairs June 26
- Place, monitor, take down barricades for the parade. And do a road apple and candy trash clean up after parade
- Meet with Lions and Diahann Potrebenko (Saddle Hills County) about upgrades to the substrate at the Lion's park. Also Have Diahann Complete a base playground inspection at our playgrounds.
- Replaced the 4 tires on the Cat skid steer after having a blow out while sweeping 45ave

**VILLAGE OF RYCROFT ACTION ITEM LIST**

**LAST UPDATED: JULY 12, 2019**

| DATE | AGENDA ITEM | DIRECTION AND ACTION REQUIRED | STATUS |
|---|---|---|---|
| May 15 18 | 4.2 | Administration to investigate and follow up the arena legal issue PT | Lawyer proceeding cost effectively with new measures. Updated Council May 1 |
| Sept 18 18 | 8.6 | Coordinate the installation of a park bench shade structure in the Village east side playground. DI | CPHWC ordering bench for us to install |
| Jan 15 19 | 9.4 | Demolish the house at 4616 50 street, then list the property for sale with our Real Estate Agent. DI | Demo started, site clean up in progress |
| Jan 15 19 | 9.4 | Advertise for sale by sealed bids the items located in the garage located at 4630 50 street, discard whatever remains as unusable, then list the property for sale with our Real Estate Agent. PT | Materials advertised, sold, and removed. |
| Jan 15 19 | 9.4 | Defer any action on the property located at 4648 53 street until contact is made with the owner and an update is brought back to Council. PT | Contact made. CAO working with owner. |
| Jan 15 19 | 9.4 | Clean the property by leveling the top soil piles located on the property at 4619 44 street, and list the property for sale with our Real Estate Agent. PT DI | Planned for July |
| Jan 15 19 | 9.4 | Eliminate the trailer and addition from the property located at 4624 46 street, then list the property for sale with our Real Estate Agent. PT DI | Stripping started June 3. Demo started, site clean up in progress |
| Jan 15 19 | 9.4 | Advertise for sale by sealed bids the items located in the house at 4639 53 street, discard whatever remains as unusable, demolish the house, list the property for sale with our Real Estate Agent. DI PT | Materials advertised, sold, and removed. Demo started, site clean up in progress |
| Jan 15 19 | 9.10 | Advertise for another community member to fill the vacancy on the FCSS board. RP | Advertisement first out Jan 25 in paper and social media. No response to date. |
| Mar 6 19 | 9.7 | Assist the Rycroft Agricultural Society with the organization of the Deken Race 8 Chuck wagon Races Parade. RP | Parade is July 6. COMPLETE |
| Apr 16 19 | 5.1 | Follow up on the Merry Pioneers expressed building concerns. PT DI | Exterior Site visit in April. |
| June 18 19 | 5.1 | Enter into an agreement with Ritchie Bros. Auctions to sell lots 5 and 8 (Plan 8922532, 15-78-6-W6) located in the Crossroads Industrial Subdivision at a reserved auction with a listing price of fair market value | Contact made June 19 |
| June 18 19 | 6.1 | Cancel the regular Council meetings scheduled for July 3 and August 7. RP | COMPLETE |
| June 18 19 | 9.1 | Send a $1,000 operating grant to the Rycroft Baseball Association for maintaining the 3 ball diamonds in Rycroft | COMPLETE |
| June 18 19 | 9.2 | Provide a grant of $3,200 to support the Race the 8 Chuckwagon Races held at the Rycroft Ag. Grounds | COMPLETE |
| June 18 19 | 9.3 | Create a reply letter regarding the request to locate a cannabis production facility in the M1 Industrial district PT | COMPLETE |
| June 18 19 | 9.5 | Create a letter to the G5 indicating support with 3 motions for the Seniors Housing project in Spirit River. RP | COMPLETE |
| June 18 19 | 9.6 | Approve the updated policies ADM.13 Community Hall Rental; ADM.04 Burning; FIN.01 Tangible Capital Asset; and FIN.02 Tax Installment Payment Plan as presented; and delete policies GEN.01 Municipal Owned Properties; EM.01 Central Peace Regional Emergency Management (2009); HR.02 Job Descriptions; and HR.03 Employee Conduct PT | COMPLETE |

# July 19

July 19

| Su | Mo | Tu | We | Th | Fr | Sa |
|---|---|---|---|---|---|---|
| | 1 | 2 | 3 | 4 | 5 | 6 |
| 7 | 8 | 9 | 10 | 11 | 12 | 13 |
| 14 | 15 | 16 | 17 | 18 | 19 | 20 |
| 21 | 22 | 23 | 24 | 25 | 26 | 27 |
| 28 | 29 | 30 | 31 | | | |

August 19

| Su | Mo | Tu | We | Th | Fr | Sa |
|---|---|---|---|---|---|---|
| | | | | 1 | 2 | 3 |
| 4 | 5 | 6 | 7 | 8 | 9 | 10 |
| 11 | 12 | 13 | 14 | 15 | 16 | 17 |
| 18 | 19 | 20 | 21 | 22 | 23 | 24 |
| 25 | 26 | 27 | 28 | 29 | 30 | 31 |

| SUNDAY | MONDAY | TUESDAY | WEDNESDAY | THURSDAY | FRIDAY | SATURDAY |
|---|---|---|---|---|---|---|
| Jun-30 | Jul-1<br>CANADA DAY | 2 | 3 | 4 | 5 | 6<br>Deken 8 Chuckwagon Race |
| 7 | 8 | 9 | 10 | 11 | 12 | 13 |
| 14 | 15 | 16<br>6:30pm Council Meeting (Council Chambers) | 17<br>7:00pm Friends of the Rycroft Community Hall DP (Rycroft Community Hall) | 18<br>6:00pm CP Regional Emergency Mgmt Comm mtg JV (Birch Hills County) - Brian Ballard | 19 | 20 |
| 21 | 22<br>8:30am Economic Disaster Resilience & Recovery Workshop DP (Saddle Hills County) | 23<br>10:30am SHC Council mtg report DP (SHC) | 24 | 25<br>Water North Coalition Mtg DP (Kakut Lake) | 26<br>Payroll Cut Off | 27 |
| 28 | 29 | 30 | 31 | Aug-1 | 2 | 3 |

# August 19

August 19

| Su | Mo | Tu | We | Th | Fr | Sa |
|---|---|---|---|---|---|---|
| | | | | 1 | 2 | 3 |
| 4 | 5 | 6 | 7 | 8 | 9 | 10 |
| 11 | 12 | 13 | 14 | 15 | 16 | 17 |
| 18 | 19 | 20 | 21 | 22 | 23 | 24 |
| 25 | 26 | 27 | 28 | 29 | 30 | 31 |

September 19

| Su | Mo | Tu | We | Th | Fr | Sa |
|---|---|---|---|---|---|---|
| 1 | 2 | 3 | 4 | 5 | 6 | 7 |
| 8 | 9 | 10 | 11 | 12 | 13 | 14 |
| 15 | 16 | 17 | 18 | 19 | 20 | 21 |
| 22 | 23 | 24 | 25 | 26 | 27 | 28 |
| 29 | 30 | | | | | |

| SUNDAY | MONDAY | TUESDAY | WEDNESDAY | THURSDAY | FRIDAY | SATURDAY |
|---|---|---|---|---|---|---|
| Jul-28 | 29 | 30 | 31 | Aug-1 | 2 | 3 |
| 4 | 5<br>CIVIC HOLIDAY | 6<br>5:30pm FCSS mtg DP (MDSR Office) | 7 | 8 | 9 | 10 |
| 11 | 12 | 13 | 14 | 15 | 16 | 17<br>Sorrentino's Golf DP RD PT (Chinook Golf Course) - CAO |
| 18 | 19 | 20<br>6:30pm Council Meeting (Council Chambers) | 21 | 22 | 23<br>10:00am NAEL mtg DP (Saddle Hills County) - Megan Ciurysek | 24 |
| 25 | 26<br>Payroll Cut Off | 27 | 28 | 29 | 30 | 31 |

# VILLAGE OF RYCROFT
# STRATEGIC PRIORITIES CHART

September 2018
Last Update: June 27, 2019

## COUNCIL PRIORITIES

**NOW**

1. **ECONOMIC DEVELOPMENT STRATEGY:** *CARES grant received. Consultant to deliver a report in July 16.*
2. **3-YEAR BUDGET: Draft** – Nov. *Adopted at May 21*
3. **UTILITY COST RECOVERY: Model** – *Adopted at Nov 20 Council Mtg with Master Rates Bylaw*
4. **MUNICIPAL DEV. PLAN: Public Consultation** – *In Process. Will be complete in Sept.*
5. **INTERMUNI. DEV. PLAN: Public Consultation** – *Open House held Oct 23.Met March 26.Final Document being prepared.*

**NEXT**

- ROADS PLAN: Review *Reviewed at Capital Budget Nov 27.Plan updated*
- LONG TERM FINANCIAL PLAN *10 year plan updated May 21*
- TRANSPORTATION PLAN – CAPITAL PLAN *Reviewed at Capital Budget Nov 27.Plan updated*
- CAPITAL PLAN *Approved at Budget Mtg Nov 27 and May 21*
- COMMUNITY GROUP SUPPORT POLICY *Approved FIN.07 Apr 3 19*
- STORMWATER MANAGEMENT PLAN *ACP Grant received. MDP Engineering on project.*

## ADVOCACY

- *Regional Fire Hall Status Being reviewed at the committee level. Consultant hired.*
- *Storm Water Grant (ACP) Received Grant. MPA Engineering hired. In progress.*
- *Community Crime Watch: Support Meeting was Dec 19. Update requested.*
- *Flood Mitigation Assessment (AE): Applied for Community Resilience Grant Oct 31*
- *Highway49/2 intersection (AT) Met with AT at AUMA Sept. Met again in June.*
- *Youth Need Assessment (FCSS) Send support letter for Youth Mentorship Program Nov 30*
- *High Speed Internet (TELUS) Telus to provide update on service options in 2019*

## OPERATIONAL STRATEGIES (CAO/Staff)

### CAO (Peter)

1. **3-YEAR BUDGET: Draft** – Nov. *COMPLETE Nov 27*
2. **ECONOMIC DEV. STRATEGY: TOR** – *CARES grant received. Report July 16 at Council Mtg*
3. **UTILITY COST RECOVERY: Model** – *Master Rates Bylaw adopted at Nov 20 Council Mtg*

- **MUNICIPAL DEV. PLAN & INTERMUNI. DEV. PLAN: Public Consultation** *IDP COMPLETE October 2018. MDP August*
- **Viability Checklist follow up** *Last update May.*
- **INTERMUNI. COLL. FRMWRK** *Initial mtg with Mayor Reeve CAOs Jan 25.*
- **ATB Loan status** *Eliminated Nov 30, 2018*
- **Policy and Bylaw Review** *In progress*

### OPERATIONS (Dolan)

1. **Facility Maintenance Report** – Nov. *In progress Report forthcoming.*
2. OH & S Program: Review Develop – Dec.
3. Equipment List - Dec. *Updated for Insurance Purposes in Nov.*

- TRANSPORTATION PLAN *Ongoing*
- Maintain all seasonal road conditions *In Progress*
- Preventive Maintenance program *In Progress*

### ADMINISTRATION (Lisa/Rachelle/Lynn)

1. Website Platform: Proposal – *New Harvest Media awarded contract. Presentation to Council May 1.*
2. Asset Mgmt System: Template – Dec *Started*
3. Computer System: Proposal - March

- Bylaw/Policy Chart *Ongoing*
- Hall Booking Procedure *In place*
- Website Maintenance *Checked Regularly*

### CAPITAL PROJECTS

1. Lift Station: Engineering - Feb. *Waiting for grant award*
2. Bulk Water: Feasibility – Dec. *Received January 2019*
3. Ice Surface: Upgrade Proposal *Project underway to be complete Oct 2019.*

- Waterfill station location re-grade improvements *Plan being developed by Jim Uhl.*

June 18 Report

RECEIVED
JUN 17 2019

7.1

Retain and Retention

June 12, 2019

1.5 hours

RhPAP

Conference call from Holly who gave a brief summary of events:

Remember 2020 conference coming to the north but no confirmation of date and location.

Skills weekend coming to Fairview which is an intense testing for future medical students.

AHS

Conference call from Susan had nothing much to report except thanks for the newsletter interview.

Locum house

Finishing off the painting and needing space left the washer and dryer outside under a tarp and when ready to move them back the washer was stolen from the back yard.

Webinar

Past course was well participated but the future costing is questionable at present future costs is around $500.00

Meet and Greet

For now on hold because the dates were too soon and the doctors were on call so now looking at a later summer potluck maybe on a Sunday. There was discussion on the numbers and who would be included on the list. Want to make it very informal but no too many Now wait and see what the dates and time look like for the doctors.

Dentists

It was brought to the Clinic Board about the assistance from us in trying to recruit more hygienists. The clinic can use more because many only want to work part-time. Discussion on social media avenue that we use or know of.

Ultra Sound

Received a letter from the Lady Auxiliary and close to collection of the full amount required approximately $46,000.00. Also the Auxiliary learned of other avenues they could approach for donations when they are campaigning.

Nardam

Pembina Pipeline came with full complement of staff and proceeded to plan fruit trees and shrubs on the hill across from the Round House and along with future grants the round house

has been painted and soon a deck will be built around the whole house. Other ideas were noted but not confirmed but grants are in place. Once complete the park will have full security.

Next meeting is September 11, 2019.

Submitted by Councillor Chelick

# VILLAGE OF RYCROFT

## FINANCIAL REPORT

For the Period Ending June 30, 2019



| General Ledger | Description | 2019 Budget | 2019 YTD Actual | 2019 Budget Remaining % |
|---|---|---|---|---|
| TOTAL TAXES GENERAL | | 945,296.00 | 944,891.15 | 0.04 |
| TOTAL TAXES REQUISITIONS | | 154,647.39 | 151,203.26 | 2.23 |
| TOTAL GENERAL REVENUE | | 818,440.00 | 630,348.48 | 22.98 |
| TOTAL ADMINISTRATION REVENUE | | 6,300.00 | 3,198.43 | 49.23 |
| TOTAL BYLAW REVENUE | | 1,650.00 | 680.00 | 58.79 |
| TOTAL PUBLIC WORKS REVENUE | | 50,000.00 | 0.00 | 100.00 |
| TOTAL WATER REVENUE | | 443,500.00 | 187,083.68 | 57.82 |
| TOTAL SEWER REVENUE | | 77,000.00 | 28,051.95 | 63.57 |
| TOTAL WASTE REVENUE | | 80,000.00 | 32,989.69 | 58.76 |
| TOTAL PLANNING & DVPT REVENUE | | 2,000.00 | 50.00 | 97.50 |
| TOTAL RECREATION REVENUE | | 0.00 | 368.75 | 0.00 |
| TOTAL CULTURE REVENUE | | 0.00 | 0.00 | 0.00 |
| TOTAL COMMUNITY HALL REVENUE | | 12,000.00 | 4,500.00 | 62.50 |
| TOTAL VILLAGE REVENUE | | 2,590,833.39 | 1,983,365.39 | 23.45 |
| TOTAL COUNCIL EXPENSES | | 92,100.00 | 32,940.13 | 64.23 |
| TOTAL ADMINISTRATION EXPENSE | | 470,154.00 | 216,857.60 | 53.88 |
| TOTAL PROTECTIVE SERVICES EXPE | | 120,132.00 | 103,309.95 | 14.00 |
| TOTAL BYLAW ENFORCEMENT EXPENS | | 21,000.00 | 3,942.38 | 81.23 |
| TOTAL PW OPERATIONS EXPENSE | | 478,973.30 | 140,652.16 | 70.63 |
| TOTAL STORM SEWER EXPENSE | | 18,000.00 | 0.00 | 100.00 |
| TOTAL WATER EXPENSE | | 470,013.98 | 315,815.40 | 32.81 |
| TOTAL SEWER EXPENSE | | 68,503.98 | 23,696.44 | 65.41 |
| TOTAL SOLID WASTE EXPENSE | | 67,660.00 | 34,745.48 | 48.65 |
| TOTAL FCSS EXPENSE | | 5,136.00 | 200.00 | 96.11 |
| TOTAL PLANNING & DVPT EXPENSE | | 2,000.00 | 0.00 | 100.00 |
| TOTAL RECREATION EXPENSE | | 60,000.00 | 30,158.09 | 49.74 |
| TOTAL NARDAM EXPENSE | | 0.00 | (44.21) | 0.00 |
| TOTAL COMMUNITY HALL EXPENSE | | 36,435.00 | 19,800.10 | 45.66 |
| TOTAL LIBRARY EXPENSE | | 17,067.00 | 11,630.78 | 31.85 |
| TOTAL SENIORS EXPENSE | | 2,300.00 | 0.00 | 100.00 |
| TOTAL CULTURE GENERAL EXPENSE | | 1,725.00 | 0.00 | 100.00 |
| TOTAL REQUISITION EXPENSE | | 153,745.39 | 78,158.37 | 49.16 |
| TOTAL VILLAGE EXPENSE | | 2,084,945.65 | 1,011,862.67 | 51.47 |
| TOTAL SUPLUS/DEFICIT | | (505,887.74) | (971,502.72) | (92.04) |

# VILLAGE OF RYCROFT

## FINANCIAL REPORT

For the Period Ending June 30, 2019

| General Ledger | Description | 2019 Budget | 2019 YTD Actual | 2019 Budget Remaining % |
|---|---|---|---|---|
| AMORTIZATION EXPENSE EXCLUDED | | 522,254.00 | 0.00 | 100.00 |

*** End of Report ***

9.2

**CAO**

**Subject:** FW: ALBERTA/ NWT COMMAND -ROYAL CANADIAN LEGION - MILITARY SERVICE RECOGNITION BOOK

**Attachments:** Ratesheet.pdf

**From:** Jeff Ross <jross@campaign-office.com>
**Sent:** June-14-19 12:01 PM
**To:** Village of Rycroft <rycroft@rycroft.ca>
**Subject:** ALBERTA/ NWT COMMAND -ROYAL CANADIAN LEGION - MILITARY SERVICE RECOGNITION BOOK

Hello Rachelle ,

I would like to extend gratitude for all of the support you have provided, which has benefited not only our Veterans but also our youth.

I called today regarding the Alberta NWT Command Legion's 12th Annual Military Service Recognition Book.

This publication recognizes those brave individuals who sacrificed so much for the freedoms that we enjoy today. Thousands of copies will be distributed free of charge to all Legion Branches and advertisers, select schools and libraries, and will be available on-line for anyone to view or print.

We are profoundly indebted to our Veterans. Their extraordinary service and commitment have afforded us the rights and freedoms that are merely a dream to millions of people around the globe.

The Royal Canadian Legion has honoured these deserving citizens with unwavering support. The Military Service Recognition Book is a fitting tribute to our Veterans and will be an invaluable resource to our young people, whose pride and character will be enhanced by learning about the very important role played by our Veterans, the Royal Canadian Legion, and the contributions of its members and supporters.

Past copies can be viewed online by clicking here: books

*As a reference , here is a copy of your last ad in our publication, the Business Card , priced again at $285 for the year:

2018 $285.00.

# VILLAGE OF RYCROFT

Box 360, 4703 51st Street, Rycroft, AB T0H 3A0

**HONOURS OUR TROOPS, PAST, PRESENT & FUTURE.**

LEST WE FORGET.

As discussed we would like to extend an invitation to your organization to show support to our Veterans by purchasing an advertisement.
If require any additional information, please do not hesitate to contact me at my number listed below, or by replying to this email.
Thank you again for your consideration and/or support.


Jeff Ross

**Alberta / NWT Command - Royal Canadian Legion**

**Campaign Office 1-888-404-1877**


Alberta-NWT Command Legion

Alberta-NWT Command
Legion

# Alberta-Northwest Territories Command
# The Royal Canadian Legion

## *"Military Service Recognition Book"*

Dear Sir/Madam:

Thank you for your interest in the **Alberta-Northwest Territories Command of The Royal Canadian Legion,** representing **Veterans** in Alberta and the NWT. Please accept this written request for your support, as per our recent telephone conversation.

The **Alberta-NWT Command** is very proud to be printing another **5,000 copies** of our annual "**Military Service Recognition Book"** that helps recognize and honour many of our brave Veterans who served our Country so well during times of great conflict. This annual publication goes a long way to help the Legion in our job as the **"Keepers of Remembrance"**, so that none of us forget the selfless contributions made by our **Veterans.**

We would like to have your organization's support for this Remembrance project by sponsoring an advertisement space in our **"Military Service Recognition Book."** Proceeds raised from this important project will allow us to fund the printing of this unique publication and also help our Command to improve our services to **Veterans** and the more than 170 communities that we serve throughout Alberta and the NWT. The Legion is recognized as one of Canada's largest "Community Service" organizations and we are an integral part of all the communities we serve. This project ensures the Legion's continued success in providing very worthwhile services.

Enclosed, please find a rate sheet for your review. Whatever you are able to contribute to this worthwhile endeavor would be greatly appreciated. For further information please contact the **Alberta-NWT Command Campaign Office** toll free at **1-888-404-1877**.

Thank you for your consideration and or support.

Sincerely,

Chris Strong
President

# Alberta-Northwest Territory Command
# The Royal Canadian Legion

## *"Military Service Recognition Book"*

## Advertising Prices

| Ad Size | Cost | | GST | | Total |
|---|---|---|---|---|---|
| Full Colour Outside Back Cover | $2,295.24 | + | $114.76 | = | $2,410.00 |
| Inside Front/Back Cover (Full Colour) | $1,995.24 | + | $99.76 | = | $2,095.00 |
| Full Colour 2 Page Spread | $3,190.48 | + | $159.52 | = | $3,350.00 |
| Full Page (Full Colour) | $1,595.24 | + | $79.76 | = | $1,675.00 |
| Full Page | $1,195.24 | + | $59.76 | = | $1,255.00 |
| ½ Page (Full Colour) | $895.24 | + | $44.76 | = | $940.00 |
| ½ Page | $695.24 | + | $34.76 | = | $730.00 |
| ¼ Page (Full Colour) | $542.86 | + | $27.14 | = | $570.00 |
| ¼ Page | $442.86 | + | $22.14 | = | $465.00 |
| 1/10 Page (Full Colour) | $323.81 | + | $16.19 | = | $340.00 |
| 1/10 Page (Business Card) | $271.43 | + | $13.57 | = | $285.00 |

**G.S.T. Registration # R12 397 0410**

**All typesetting and layout charges are included in the above prices.**

**A complimentary copy of this year's publication will be received by all advertisers purchasing space of 1/10 page and up, along with a Certificate of Appreciation from the Alberta-NWT Command.**

PLEASE MAKE CHEQUE PAYABLE TO:
**Alberta-NWT Command**
**The Royal Canadian Legion**
**PO Box 2275, Stn. M**
**Calgary , AB T2P 2M6**

Visa/Mastercard Accepted

adcopy can be emailed to: abcl@fenety.com

9.3

# THE SPIRIT RIVER KINETTES

## HOLE IN ONE GOLF TOURNAMENT

Dear Sponsor:

Our Annual Hole-In-One Charity Golf Tournament at Chinook Valley Golf Course is quickly approaching.

With the completion of the outdoor rink at Kin Park, this years proceeds will go towards other enhancements to Kin Park.

If you are able to sponsor in anyway, here is an example of how you can help:

| | | |
|---|---|---|
| 1. | Hole In One Sponsor | $250.00 insurance |
| 2. | Closest To the Pin | $250.00 |
| 3. | Supper Sponsor | $200.00 |
| 4. | Beer Hole | $500.00 |
| 5. | Loonie Auction | $500.00 |
| 6. | Prize Sponsors | $150.00 |
| 7. | Donated Prizes | |
| **8.** | **New this year, a silent auction – Donated items for this event** | |

**Tournament Date: September 7th, 2019**
**HOSTED BY: CHINOOK VALLEY GOLF COURSE**

If you are considering sponsoring this worthwhile event or have any questions please contact one of the following Kinettes:

**Megan Richardson** Work: 780-864-3600
**Brittney Jackson** 780-864-8617
**Jordan Jarvis** 587-580-6337

**Thank you** in advance for considering this event.

- 2018 donated $200 Supper Sponser.
- Grant account available funds @ June 18/19 is $5,473

RT.

9.4

**CAO**

**Subject:** FW: ParentLink space

**From:** Diahann Potrebenko
**Sent:** June-26-19 3:43 PM
**To:** CAO
**Subject:** Fwd: ParentLink space

Can we put this on the agenda for our meeting July 16th
Thanks
Di

Sent from myMail for iOS

-------- Forwarded message --------
From: FCSS <FCSS@mdspiritriver.ab.ca>

Dear Honourable Board Members ☺

We will have a ParentLink item on our August 6 meeting Agenda. Tracey Gerk from ParentLink will be attending to present her programs to the Board. This will be a 15-20 minute presentation which will better inform you as to what they offer in our community for programs, and the value of their presence in our communities.

There has been some confusion as to the agreements between the municipalities for paying for ParentLink to use the Legion Hall in Spirit River for the playgroup. Questions arose in January, but were never fully resolved. It has become the FCSS Board's responsibility to decide how this matter should be resolved.

Background:

According to a G3 meeting decision, which no recording has been found, the 3 municipalities were to split the cost evenly for the rental of the Legion Hall for the community playgroup to function. This was after some time of the MD donating the Brownlee for the program, and feeling that the responsibility of cost should be shared more evenly across the municipalities.

In January 2019, the Village of Rycroft questioned why they were being billed for the Legion Hall use when the programming was not in their community. It has been reminded several times that this community programming is for everyone of the greater community, not just Spirit River residents. At the time, the Village paid the amount they were asked to pay, but nothing further was resolved.

Now, the Legion has asked who to invoice for the 12 session uses of the hall from January-February and April-May. The Village of Rycroft sponsored the program for 3 sessions at their Community Hall, in March. In response to the questioning of who should pay, it has been suggested by Kelly Hudson (and agreed to by our Chair), that FCSS pay the bill and that the FCSS Board, with it's Municipal Council representatives, must discuss how to recoup the cost of this $900 bill from the

municipalities, as it is a significant amount of money that was not budgeted for. (The rental cost of the Legion Hall is $75 per day, at 12 sessions = $900)

One option is to split the cost evenly between 3 municipalities so each pays $400.

Another option is to incorporate the donated space of the Rycroft hall as 3 sessions already paid by the Village of Rycroft. This way 15 sessions divided by 3 equals 5 sessions paid by each municipality equals Town of Spirit River paying $375, the MD of Spirit River paying $375, and the Village of Rycroft paying $150.

As well, we must discuss how to move forward, as the Village of Rycroft is happy to donate the hall for use of community programs within Rycroft, but is reluctant to spend money supporting the community program at a location not within the Village. At this date, Tracey has tried to accommodate both community locations, and has 6 sessions booked in Rycroft at the hall from September 10-October 15, and would like to book 6 sessions from October 22-November 26 (Tuesdays) in Spirit River. We must resolve how to sponsor the space for the Spirit River sessions, I am assuming between the Town and the MD this will need to be agreed upon.

If you have further questions or input to this matter, please let me know by July 31st, so I may find answers or more information for us to discuss this matter further on August 6.

We have no meeting scheduled for July. Have a happy summer month!!

Julie Temple

**FCSS Coordinator**

**Central Peace Family and Community Support Services**

Parent link has booked space @ our Rycroft Community Hall Sept 10 to Oct 15 Tuesdays, 9-12, no change.

PT.

9.5

**Village of Rycroft**
**Request for Decision**

**Council Meeting Date: July 16, 2019**

**TOPIC:** Central Peace Intermunicipal Subdivision and Development Appeal Board Bylaw and Agreement

**RECOMMENDED ACTION:**

1. That Council give three readings to Bylaw 207-19 Central Peace Intermunicipal Subdivision and Development Appeal Board.
2. That Council authorize the Village of Rycroft to enter into an agreement with the G5 Municipalities as a partner in the Central Peace Intermunicipal Subdivision and Development Appeal Board.

**BACKGROUND:** At the G5 general meeting on June 26, the group agreed by consensus to form a joint Intermunicipal Subdivision and Development Appeal Board.
This bylaw will repeal our current Subdivision and Development Appeal Board Bylaw 86-08.
At the Organizational meeting in October 2018, Council appointed Dianne Dika, Brenda Friedel, Shane Milkovich, and Caroline Sekulic as Subdivision and Development Appeal Board members. Lisa Shaykowski is responsible for Clerk duties.

**FINANCIAL IMPLICATIONS:** The municipality that has an appeal is responsible for the costs of the appeal.

**POLICY AND/OR LEGISLATIVE IMPLICATIONS:** *Municipal Government Act* Section 627 states a council must have a Subdivision Appeal Board Bylaw.

**ALTERNATIVE OPTIONS:**

1. Council could suggest changes to the agreement or bylaw.

**ATTACHMENTS:**

1. Central Peace Intermunicipal Subdivision and Development Appeal Board Bylaw
2. Central Peace Intermunicipal Subdivision and Development Appeal Board Agreement

John Thomas
**Chief Administrative Officer**

June 27/19
**Date**

S:\COUNCIL\Requests for Decisions\RFD 2019\RFD SDAB Bylaw and Agreement July 19.doc

# VILLAGE OF RYCROFT
# BYLAW NO. 207-19

## CENTRAL PEACE INTERMUNICIPAL SUBDIVISION AND DEVELOPMENT APPEAL BOARD

**A BYLAW TO ESTABLISH AN INTERMUNICIPAL SUBDIVISION AND DEVELOPMENT APPEAL BOARD.**

**WHEREAS** Section 627 of the *Municipal Government Act*, RSA 2000, c. M-26, as amended, authorizes a municipality to enter into an agreement with one or more municipalities to establish an intermunicipal subdivision and development appeal board;

**AND WHEREAS** the agreement must provide for the function, duties, procedures and conduct of the intermunicipal subdivision and development appeal board and its members;

**AND WHEREAS** the Council of the Village of Rycroft deems it necessary to establish an intermunicipal subdivision and development appeal board to hear subdivision and development.

**NOW THEREFORE** the Council of the Village of Rycroft duly assembled hereby enacts as follows:

1. This Bylaw may be cited as the "Central Peace Intermunicipal Subdivision and Development Appeal Board Bylaw".

2. An Intermunicipal Subdivision and Development Appeal Board is hereby established.

3. The Council of the Village of Rycroft is hereby authorized to enter into an agreement with the Municipal District of Spirit River No. 133, Saddle Hills County, the Town of Spirit River and Birch Hills County to provide for the following:

   a) The hearing of subdivision and development appeals within the boundaries of the municipalities;
   b) The function and duties of the Intermunicipal Subdivision and Development Appeal Board, and;
   c) The procedure and conduct of the Intermunicipal Subdivision and Development Appeal Board and its members.

4. Should any provision of this Bylaw become invalid, void, illegal or otherwise unenforceable, it shall be considered separate and severable from the Bylaw and the remainder shall remain in force and be binding as though such provision had not been invalid.

5. Bylaw No. 86-08 is hereby repealed.

6. This Bylaw shall come into force and effect upon third and final reading.

Read a first time this day of 2019.

Read a second time this day of 2019.

Read a third time and passed this day of 2019.

Mayor Diahann Potrebenko

CAO Peter Thomas

AN AGREEMENT DATED THIS ___ DAY OF _____, 2019.

BETWEEN

**BIRCH HILLS COUNTY**

- and -

**THE MUNICIPAL DISTRICT OF SPIRIT RIVER NO. 133**

- and -

**SADDLE HILLS COUNTY**

- and -

**THE TOWN OF SPIRIT RIVER**

- and -

**THE VILLAGE OF RYCROFT**

(Hereinafter collectively referred to as the "Municipalities")

# CENTRAL PEACE REGIONAL INTERMUNICIPAL SUBDIVISION AND DEVELOPMENT APPEAL BOARD AGREEMENT

**WHEREAS** Section 627 of the *Municipal Government Act,* RSA 2000, Chapter M-26, as amended, authorizes municipalities to enter into an agreement to establish an intermunicipal subdivision and development appeal board;

**AND WHEREAS** the Councils for the respective Municipalities have determined that it is appropriate to establish an Intermunicipal Subdivision and Development Appeal Board for the purposes of hearing appeals from decisions made by the subdivision authority and development authority of each respective municipality;

**NOW THEREFORE** in consideration of the premises and mutual terms, conditions and covenants to be observed and performed by each of the parties hereto, the Municipalities agree as follows:

## 1. DEFINITIONS

a. **"Act"** means the *Municipal Government Act,* RSA 2000, c. M-26 as amended from time to time;

b. **"Appellant"** means a person who, pursuant to the Act, has filed a notice of appeal with the Intermunicipal Subdivision and Development Appeal Board;

c. **"Clerk"** means the person appointed by the Council of a Municipality to act as Clerk for the ISDAB.

d. **"Council"** means the Council of a Municipality;

e. **"Development Authority"** means the authority established by each Council to exercise development powers and duties on behalf of their Municipality;

f. **"Intermunicipal Subdivision and Development Appeal Board" ("ISDAB")** means the appeal board established by the Municipalities by this Agreement pursuant to Sections 627 and 628 of the Act;

g. **"Member"** means a member of the ISDAB;

h. **"Quorum"** means three (3) members of the ISDAB to act at a hearing;

i. **"Subdivision Authority"** means the authority established by each Council to exercise subdivision powers and duties on behalf of the Municipality;

j. **Staff"** means a member of the Municipalities planning department or planning consultant.

All other terms used in this Agreement shall have the meaning assigned to them in the "Act".

## 2. ISDAB ESTABLISHMENT

2.1 The ISDAB is hereby established.

2.2 The ISDAB shall hear all appeals from decisions made by the Municipalities' Development Authority in accordance with Sections 678 and 686 of the Act.

2.3 The ISDAB has all the powers, duties and responsibilities of a Subdivision Development and Appeal Board under the Act and the Subdivision and Development Regulations passed pursuant to the Act.

2.4 The ISDAB shall operate in accordance with the Policies and Procedures attached hereto as Schedule "A".

## 3. ISDAB MEMBERSHIP

3.1 The ISDAB shall consist of at least five Members (at least one, and no more than two, from each municipality) who shall be appointed when required to sit for a hearing from the available list of appeal board members eligible to hear appeals on behalf of the municipalities:

3.2 Members shall not be elected officials or employees of the Municipalities.

3.3 Members shall adhere to the Member Rules of Conduct set out in Schedule "B" attached hereto.

3.4 Any Member may be removed by resolution of the appointing Council where, in the opinion of the appointing Council, the Member has contravened the standards for Member Rules of Conduct as set out in Schedule "B" or the Member fails or refuses to adhere to the Policies and Procedures as set out in Schedule "A".

## 4. TERM OF OFFICE

4.1 The term of office for Members shall be four (4) years. Regardless of the date of appointment, the expiry of the term of office for all Members will be December 31 in the year of the general municipal elections.

4.2 Members may be reappointed by Council for one or more additional terms subject to their written application to do so in accordance with the advertised request for Board Members.

4.3 Any Member may resign from his position on the Board by sending written notice to the Council of the municipality that had appointed that member.

## 5. ISDAB CLERK

5.1 An employee of each of the Municipalities will be appointed to act as the Clerk for the ISDAB.

5.2 The responsibilities of the Clerk are as follows:

a. ensure that all statutory requirements of the ISDAB are met;

b. inform all affected parties of the appeal hearing in accordance with the Act;

c inform all statutory parties of the appeal hearing in accordance with the Act;

d compile all necessary documentation for distribution to the Members;

e attend all ISDAB appeal hearings;

f provide services for the recording of the proceedings of the ISDAB and for retention of exhibits including all written submissions to the ISDAB;

g prepare the ISDAB hearing minutes including the names and addresses of all parties making representations to the ISDAB;

h communicate decisions of the ISDAB to the affected parties in accordance with the Act; and

i such other matters as the ISDAB may direct.

## 6. MEMBER REMUNERATION

6.1. Members shall be entitled to such remuneration and travel expenses as per the current applicable Bylaw and/or Policy in the Municipality in which the appeal has been submitted.

## 7. ADMINISTRATION

7.1 The fee for an appeal will be the fee as set by the Council of the Municipality from time to time. A refund of the appeal fee may be granted by the Municipality if a withdrawal is received in writing and has been delivered to the Clerk prior to notifications of the appeal hearing being sent.

7.2 ISDAB Hearings will be held at the Municipal Administration Building or other such location as determined by the Municipality and advertised in accordance with the Act from time to time.

## 8. ISDAB COSTS

8.1 All ISDAB costs and expenses, including the administrative costs of holding the hearing and any legal or other fees the ISDAB may incur shall be paid by the Municipality in which the application has been submitted.

## 9. GENERAL

9.1 Headings in this Agreement are for reference purposes only.

9.2 Words in the masculine gender will include the feminine gender whenever the context so required and vice versa.

9.3 Words in the singular shall include the plural or vice versa whenever the context so requires.

9.4 This Agreement may be executed in any number of counterparts, each of which when executed and delivered shall constitute a duplicate original, but all counterparts together shall constitute a single agreement.

**IN WITNESS WHEREOF,** the Municipalities have executed this Agreement as evidenced by the duly authorized signatures below

**BIRCH HILLS COUNTY**

Per: _____
Reeve

Per: _____
Chief Administrative Officer

**TOWN OF SPIRIT RIVER**

Per: _____
Mayor

Per: _____
Chief Administrative Officer

**MUNICIPAL DISTRICT OF SPIRIT RIVER NO. 133**

Per: _____
Reeve

Per: _____
Chief Administrative Officer

**VILLAGE OF RYCROFT**

Per: _____
Mayor

Per: _____
Chief Administrative Officer

**SADDLE HILLS COUNTY**

Per: _____
Reeve

Per: _____
Chief Administrative Officer

## SCHEDULE "A"

## CENTRAL PEACE REGIONAL INTERMUNICIPAL SUBDIVISION AND DEVELOPMENT APPEAL BOARD

## POLICIES AND PROCEDURES

### 1. DEFINITIONS

a. **"Act"** means the *Municipal Government Act,* RSA 2000, c. M-26 as amended from time to time;

b. **"Agreement"** means the Central Peace Regional Intermunicipal Subdivision and Development Appeal Board Agreement dated _____ __, 2019.

c. **"Appellant"** means a person who, pursuant to the Act, has filed a notice of appeal with the Intermunicipal Subdivision and Development Appeal Board.

d. **"Board"** means the ISDAB.

e. **"Clerk"** means the person(s) appointed to act as Clerk for the ISDAB.

f. **"Closed Session"** means a meeting of the Board which is closed to the public pursuant to s.197 of the Act.

g. **"Point of Order"** means the raising of a question by a Member with the view of calling attention to any departure from the Policies or Procedures, or the customary modes or proceedings in debate, or in the conduct of the Board's business.

h. **"Staff"** means an employee or consultant of Birch Hills County, Municipal District of Spirit River No. 133, Saddle Hills County, Town of Spirit River and Village of Rycroft as the case may be.

All other terms used in this Agreement shall have the meaning assigned to them in the "Act".

### 2. APPLICATION

2.1 These procedures shall apply to all meetings of the Board.

2.2 Any matter of meeting procedure which is not herein provided for, shall be determined according to the most current edition of Robert's Rules of Order.

2.3 Procedure is a matter of interpretation by the Chair.

2.4 In the event of a conflict between the provisions of these Policies and Procedures and Roberts Rules of Order, the provisions of these Policies and Procedures shall prevail.

## 3. TRAINING

3.1 All Members shall receive training as ISDAB Members in accordance with the requirements of the Act.

3.2 The ISDAB may retain legal counsel to provide training or advice before, during or after a hearing as the case may be.

## 4. PANEL AND CHAIR

4.1 When a hearing is required, the panel of Members to hear the appeal will be appointed by the Clerk of the ISDAB based on Member availability and experience.

4.2 The Clerk will use his/her best efforts to appoint to the panel a Member residing in the Municipality from which the appeal originated.

4.3 When a hearing is required the members appointed shall select a Chair and a Vice Chair for the hearing.

4.4 The Chair

a. shall be responsible for the conduct of the hearing and for ensuring the hearing is conducted in a fair and impartial manner, in accordance with the rules for such hearings as set out in the Act and the rules of natural justice;

b. is authorized to rule that evidence presented at a hearing is irrelevant to the matter at issue and may direct the Members to disregard the evidence, and

c. may limit a submission if he/she determines it to be repetitious.

4.5 If the Chair is absent for any reason from a hearing, the Vice Chair shall preside.

## 5. QUORUM

5.1 Three (3) Members shall constitute a quorum of the Board.

## 6. DECISIONS

6.1 Only Members present for the entire hearing shall participate in the making of a decision on any matter before the Board. The Clerk shall not participate in the making of a decision on any matter before the Board.

6.2. The decision of the majority of Members present at the meeting shall be deemed to be the decision of the whole Board.

6.3 In the event of a tie vote, the appeal shall be denied.

6.4 The Board may make its decision with or without conditions in accordance with the Act.

6.5 If an appeal is recessed for any reason following the submission of evidence, the appeal hearing may be recessed to the next scheduled meeting or to a scheduled meeting. However, only those Members present at the original hearing shall render a decision of the matter.

6.5 An order, decision, approval, notice or other thing made, given or issued by the Board shall be signed by the Chair or Vice Chair or their designate.

## 7. APPEAL HEARINGS

7.1 The Board shall consider and decide all subdivision and development appeals and s. 645 Stop Order appeals which have been properly filed with the Municipality in accordance with the Act.

7.2 The Board shall hold a public hearing respecting the appeal within thirty (30) days from the date of receipt of the written notice of appeal.

7.3 The Board shall give notice of the hearing in accordance with the Act.

7.4 The Board shall make available for public inspection prior to the hearing all relevant documents and materials respecting the appeal.

7.5 The Board shall hear from parties in accordance with the Act.

7.6 Letters previously submitted to a Municipality's subdivision or development authority will not be considered by the Board unless resubmitted for the appeal hearing. The author of the letter must be identified on the document.

7.7 The Board shall hear appeals in public, but it may at any time recess and deliberate in a closed session.

7.8 If the Board desires at the hearing of the appeal, to request further technical information, legal opinions, or other assistance, it may recess the hearing pending receipt of such information.

7.9 Electronic or similar recording devices shall not be used during the hearing by anyone in attendance except the Clerk. Such electronic recordings are for ensuring the accuracy of the minutes and will be destroyed once the minutes are adopted.

7.10 The Board shall make and keep a written record of its proceedings which may be in the form of a summary of the evidence presented at the hearing.

7.11 The Board shall give a written decision together with the reasons for the decision in accordance with the Act.

## 8. HEARING PROCEDURE

8.1 At appeal hearings, the following procedure will typically be followed:

a. The Chair for the meeting will call for a motion to go into public hearing and ask if appellant is present to speak to the appeal.

b. If the Appellant indicates his/her presence to speak to the appeal, then the Chair will outline the public hearing procedures.

c. The Clerk will confirm that the notice of appeal has been provided to all parties in accordance with the Act.

d. The Chair will ask if anyone objects to any Member hearing the appeal.

e. A member of Staff will introduce the appeal and present the administrative report outlining the background to the appeal.

f. The Chair shall call upon the Appellant to present his/her appeal submission.

g. After identifying him/herself, the Appellant will be requested to present his/her appeal within a reasonable time period.

h. The Chair shall then call upon any persons in attendance at the hearing who are entitled to be heard by the Board under the Act and who wish to speak in favour of the appeal.

i. After identifying themselves, persons or representatives of any group or persons, in favour of the appeal may address the Board in

turn. The Board reserves the right to abbreviate repetitious oral submissions. Individuals may speak for a maximum of five minutes. One spokesperson per petition or group may speak for a maximum of ten minutes.

j. The Chair shall then call upon any persons in attendance at the hearing who are entitled to be heard by the Board under the Act and who wish to speak in opposition to the appeal.

k. After identifying themselves, persons or representatives of any group or persons, in opposition of the appeal may address the Board in turn. The Board reserves the right to abbreviate repetitious oral submissions. Individuals may speak for a maximum of five minutes. One spokesperson per petition or group may speak for a maximum of ten minutes.

l. The Chairperson shall then call upon the appellant and those persons in attendance at the public hearing who spoke in favor of the appeal for any rebuttal to the points raised by those who spoke in opposition to the appeal. Rebuttal comments are restricted to addressing new points raised by those who spoke in opposition to the appeal.

m. After a presentation is concluded, any Member may ask the presenter relevant questions.

n. After all presentations from the public have been completed, any Member may ask Staff relevant questions.

o. Following the public presentation and Member questions, the Chair shall close the hearing.

q. The Board may, at any time, modify or adjust the foregoing procedure as required to comply with the Act and the rules of natural justice.

8.2 Following the close of the public hearing, the Board shall deliberate and make its decision. The Board may deliberate and make its decision in a closed session.

Petitions and Letters

8.3 Persons signing such petitions are deemed to have had their position advanced by the petition and accordingly they may not speak unless they remove their names from the petition.

8.4 Individuals who have submitted a letter may only address the Board on new non-repetitious information not contained in the letter.

8.5 With the Board's approval, an individual or group may submit written submissions as part of their presentation at the public hearing, by providing fifteen (15) copies of same to the Board at the start of their presentation.

Presentation Materials

8.6 The use of slides maps, videos, and Power Point presentations are permitted and these materials along with any written submissions become the property of the Board as exhibits to the public hearing.

8.7 Written submissions shall be received by the Clerk at least three (3) days in advance of the commencement of the hearings. Notwithstanding the foregoing, the Board retains the discretion to accept late submission where deemed appropriate.

Introduction of Speakers

8.8 Persons addressing the Board shall give their name, location of residence, and indication as to whether they are speaking on their own behalf or for another person or for a group, and address the Chair when responding to questions or providing information.

8.9 A person who does not identify him/herself will not be given the opportunity to address the Board.

## 9. CONDUCT AT HEARINGS

9.1 Members of the public in attendance at a hearing:

a . shall address the board through the Chair;

b. shall maintain order and quiet; and

c. shall not applaud or otherwise interrupt any speech or action of the Members or any other person addressing the Board.

9.2. The Chair may order a member of the public who disturbs or acts improperly at a hearing by words or actions be removed. The Chair may request assistance from a Peace Officer to remove the person.

## 10. MEMBER CONDUCT

10.1. A Member wishing to speak at a hearing shall obtain the approval of the Chair before speaking.

10.2. When a Member or member of the public is addressing the Chair, every other Member shall:

a. remain quiet and seated;

b. not interrupt the speaker except on a Point of Order;

c. not carry on a private conversation; and

d. not cross between the speaker and the Chair.

10.3 When a Member is addressing the Board, he/she shall:

a. not speak disrespectfully of Her Majesty the Queen, her official representatives or her government;

b. not use offensive words in referring to a Member, an official of the Municipalities or a member of the public;

c. not reflect on a vote except when moving to rescind and when so doing, shall not reflect on the motives of the Members who voted for the motion, or the mover of the motion;

d. not shout or immediately raise his/her voice or use profane, vulgar, or offensive language or disturb the hearing; and

e. assume personal responsibility for any statement he/she quotes to the Board or upon request of the Board, shall give the source of the information.

## SCHEDULE "B"

## CENTRAL PEACE REGIONAL INTERMUNICIPAL SUBDIVISION AND DEVELOPMENT APPEAL BOARD

## MEMBER RULES OF CONDUCT

1. For the purpose of this Schedule, the following terms shall have the same meaning as in Section 169 of the Act:

   a. "Corporation", "Director", "Distributing Corporation", "Officer", "Shareholder", "Voting Rights", and "Voting Shares";

   b. "Spouse".

2. For the purpose of this Schedule, the term "Member's Family" shall have the same meaning as the term "Councillor's Family" under Section 169 of the Act.

3. No Member shall participate in the hearing of any matter before the Board in which that Member has a pecuniary interest.

4. A Member has a pecuniary interest in a matter if:

   a. The matter could monetarily affect the Member or an employer of the Member; or

   b. The Member knows or ought to know the matter could monetarily affect the Member's family.

5. For the purposes of Section 3, a Member is monetarily affected by a matter if the matter monetarily affects:

   a. The Member directly;

   b. A distributing corporation in which the Member beneficially owns voting shares carrying at least 10% of the voting rights attached to the voting shares of the corporation or of which the Member is a director or officer; or

   c. Each Corporation, other than a distributing corporation, in which the person is a shareholder, director or officer;

   d. A partnership or firm of which the Member is a member.

6. For the purposes of determining whether a Member has a pecuniary interest in the matter before the Board, all provisions of s. 170 of the Act shall apply, substituting the term "Member" for the term "Councillor".

7. No Member shall participate in the hearing of any matter before the Board in which that Member has an actual or perceived bias for or against the Appellant or any parties that appear before the Board.

8. Where a Member has a pecuniary interest in the matter before the Board, or an actual or perceived bias for or against the appellant or any parties that appear before the Board, that Member shall:

   a. disclose that interest or bias to the Board and Clerk as soon as possible

   b. abstain from participating in the hearing of the matter;

   c. abstain from any discussion of voting on the matter;

   d. be absent from the room in which the appeal is heard, except to the extent that the Member is entitled to be heard before the Board as an appellant or a person affected by the matter before the Board.

9. Where Council becomes aware of a breach of these provisions by a Member of the Board, the Council shall review the facts of the case and make a determination as to whether the Member, in the opinion of Council, has breached pecuniary interest provisions of this Schedule.

10. Where, after its review pursuant to Section 8, Council determines that a breach of the pecuniary interest or bias provisions has occurred, Council may remove the Member from the Board, in accordance with powers respecting appointment at the removal of Members set out in the Subdivision and Development Appeal Board Bylaw.

11. Members shall:

   a. not discuss any matter under appeal with any party to that appeal, outside of the formal hearing process;

   b. keep closed session discussions of Board and legal advice provided to the Board confidential, except where required to disclose that information by law;

   c. attend all Board hearings to which he or she has been assigned unless prior written consent has been received from the Chair; and

   d. participate in the deliberation and decision making process on all matters to which he or she has been assigned and has attended the public hearing for.

12. Where the appointing Council has reasonable grounds to believe that a Member has breached any of the provisions of Section 11, Council may remove that Member from the Board.

9.6

**Village of Rycroft**
**Request for Decision**

**Council Meeting Date: July 16, 2019**

**TOPIC:** Policies LEG.01 Council Duties; LEG.02 Conduct of Business by Resolution or Bylaw; LEG.03 Duties of Mayor; LEG.05 Councillors Tax Exemption; LIB.01 Library; LEG.01 Responsibility of Councillors Appointed to Committees, Boards, or Authorities.

**RECOMMENDED ACTION**: That Council consider and approve the changes to the updated policies by number as presented.

**BACKGROUND:** One of the recommendations from the Viability Review Team is to review and update all policies. Changes from the old policies include mostly housekeeping, presentation, fonts, and grammar.

Specifically other changes include:

LEG.01 Council Duties; LEG.02 Conduct of Business by Resolution or Bylaw; LEG.03 Duties of Mayor. These policies spell out the duties of Council members and conduct. The information is also found in the *Municipal Government Act*, the Council Code of Conduct Bylaw 195-18, and also in our orientation package with materials from Municipal Affairs. They are therefore repetitive and could be deleted.

LEG.05 Councillors Tax Exemption. This tax benefit for Elected Officials was eliminated at the start of 2019, and is therefore no longer applicable.

LIB.01 Library Policy. All this information is covered off in Bylaw 194-18 Rycroft Library Board Bylaw. This policy is therefore redundant and should be deleted.

LEG.01 Responsibility of Councillors Appointed to Committees, Boards, or Authorities Policy. This is currently LEG.06, but with the elimination of the other policies, it can move into the #1 slot. Along with new formatting, it is suggested to delete a couple of sections. Section 1.5 deletes the burden of administration to collect a roster of Council members that attended/missed every meeting for a 12 month period, to be presented at the annual Organizational meeting.
The appointment of the Mayor and Deputy Mayor is already accounted for in bylaw 197-18 Council Procedural Bylaw, and also in the *MGA*.

**FINANCIAL IMPLICATIONS**: None.

**POLICY AND/OR LEGISLATIVE IMPLICATIONS**: One of the recommendations from the Viability Review Team is to review and update all policies.

**ALTERNATIVE OPTIONS:**

1. Council could suggest changes to any policy

**ATTACHMENTS:**

1. LEG.01 Council Duties
2. LEG.02 Conduct of Business by Resolution or Bylaw
3. LEG.03 Duties of Mayor
4. LEG.05 Councillors Tax Exemption
5. LIB.01 Library
6. LEG.01 Responsibility of Councillors Appointed to Committees, Boards, or Authorities

| | |
|---|---|
| **Chief Administrative Officer** | **Date** |

| VILLAGE OF RYCROFT<br>POLICY AND PROCEDURES MANUAL<br><br>**COUNCIL DUTIES** | **Function:**<br><br>**Policy No.**<br>**Effective Date:**<br>**Supersedes:**<br>**Amends:** | **Legislative**<br><br>**LEG.01**<br>**January 2009**<br><br>**NEW** |
|---|---|---|

**Policy Statement:**

The Council of the Village of Rycroft shall perform the duties described in the Municipal Government Act Statutes of Alberta RSA-2000 Chapter M-26, and the amendments thereto.

**Procedure:**

The Municipal Government Act, Statutes of Alberta RSA-2000, Chapter M-26 and amendments thereto states:

Councillors have the following duties:

a) To consider the welfare and interest of the Municipality as a whole and to bring to Council's attention anything that would promote the welfare or interest of the Municipality;

b) To participate generally in developing and evaluating the policies and programs of the Municipality;

c) To participate in Council Meetings and Council Committee meetings and meetings of other bodies to which they are appointed by Council;

d) To obtain information about the operation or administration of the Municipality from the Chief Administrative Officer or a person designated by the Chief Administrative Officer;

e) To keep in confidence matters discussed in private at a Council or Council Committee Meeting until discussed at a meeting held in public;

f) To perform any other duty or function imposed on Councillors by the Municipal Government Act or any other enactment, or by the Council. MGA (sec 153)

The Council members may not carry out any powers, duties or functions until those persons have taken the official oath prescribed by the Oaths of Office Act. MGA (sec 1)

| | | |
|---|---|---|
| **VILLAGE OF RYCROFT**<br>**POLICY AND PROCEDURES MANUAL**<br><br>**CONDUCT OF BUSINESS BY RESOLUTION OR BYLAW** | **Function:**<br><br>**Policy No.**<br>**Effective Date:**<br>**Supersedes:**<br>**Amends:** | **Legislative**<br><br>**LEG.02**<br>**January 2009**<br><br>**NEW** |

## Policy Statement

The Council of the Village of Rycroft shall conduct business, on behalf of the Municipality, in accordance to the provisions of the Municipal Government Act, RSA-2000, Chapter M-26 and the amendments thereto.

## Procedure:

The Council may act only by resolution or bylaw:

a) Where the Council is required or authorized under the Municipal Government Act or any other enactment or bylaw to do something by bylaw, it may only be done by bylaw.

b) Where the Council is required or authorized under the Municipal Government Act or any other enactment or bylaw to do something by resolution, or to do something without specifying that it is to be done by bylaw or resolution, it may be done by bylaw or resolution. MGA (sec 180)

A by-law or resolution of Council is not valid unless passed at a Council Meeting held in public at which there is a quorum present. MGA (sec 181(1))

A resolution of a Council committee is not valid unless passed at a meeting of that committee, held in public, at which there is a quorum present. MGA (Sec 181(2))

| VILLAGE OF RYCROFT<br>POLICY AND PROCEDURES MANUAL<br><br>DUTIES OF THE MAYOR | Function:<br><br>Policy No.<br>Effective Date:<br>Supersedes:<br>Amends: | Legislative<br><br>LEG.03<br>January 2009<br><br>NEW |
|---|---|---|

**Policy Statement:**

The Mayor of the Village of Rycroft shall perform the duties of the Chief Elected Official as described in the Municipal Government Act, RSA-2000, Chapter M-26 and the amendments thereto:

**Procedure:**

The Mayor, in addition to performing the duties of a Councillor, must:

a) Preside when in attendance at a Council Meeting unless a bylaw provides that another Councillor or other person is to preside, and

b) Perform any other duties imposed on him/her by the Municipal Government Act or any other enactment or bylaw.

The Mayor is a member of all Council committees and all bodies to which Council has the right to appoint members under the Municipal Government Act; unless the Council provides otherwise.

In the absence of the Mayor the Deputy Mayor shall preside.

The Mayor shall not purport to speak for the Council or the municipality unless a vote has been taken.

Not withstanding the above, the Mayor may not be a member of a board, commission, subdivision authority or development authority established under Part 17 of the Municipal Government Act, RSA-2000, Chapter M-26 and the amendments thereto.

| VILLAGE OF RYCROFT<br>POLICY AND PROCEDURES MANUAL<br><br>COUNCILLORS TAX EXEMPTION | Function:<br><br>Policy No.<br>Effective Date:<br>Supersedes:<br>Amends: | Legislative<br><br>LEG.05<br>February 2009<br><br>NEW |
|---|---|---|

**Purpose:**

To provide a portion of a municipal elected official's honoraria and expense allowance to be excluded from the computation of taxable income.

**Policy:**

1. In accordance with Revenue Canada's provisions for Municipal Officials, one-third (1/3) of the total allowance and honoraria paid to municipal officials shall be deemed to be in lieu of expenses. The remaining two-thirds (2/3) is income from elected or appointed office, and is therefore subject to income taxation and considered as earnings.

| | | |
|---|---|---|
| **VILLAGE OF RYCROFT**<br>**POLICY AND PROCEDURES MANUAL**<br><br>**Library Policy** | **Function:**<br><br>**Policy No.**<br>**Effective Date:**<br>**Supersedes:**<br>**Amends:** | **Library**<br><br>**LIB.01**<br>**August 2009**<br>**NEW** |

It is deemed necessary to provide this information for ease of information for the Municipal Library Board, the Library Staff, the Council of the Village of Rycroft and the Village Staff.

As per the Libraries Act:

- ✓ s.2 states that this part applies to every municipal library board that is maintained in whole or in part by property taxes
- ✓ s.3(1) states that the Council of a municipality may by bylaw, establish a municipal library board (Bylaw 21-93, amending bylaw 67-03 and amending bylaw 99-09).
- ✓ s.3(4) states that on being established, the municipal library board is a corporation and shall be known as "The (name of the municipality) Library Board".
- ✓ s.4(1) states that a municipal board shall consist of not fewer than 5 and not more than 10 members appointed by council.
- ✓ s.4(2) states that a person who is an employee of the municipal board is not eligible to be a member of that board.
- ✓ s.4(3) states that not more than 2 members of council may be members of the municipal board
- ✓ s.4(4) states that a member of the municipal board is eligible to be reappointed for only 2 additional consecutive terms of office, unless at least 2/3 of the whole council passes a resolution stating that the member may be reappointed as a member for more than 3 consecutive terms.
- ✓ s.4(5) states that subject to subsection (6), appointments to the municipal board shall be for a term of up to three years.
- ✓ s.5(1) states that the appointments of the members of the municipal board shall be made on the date fixed by council.
- ✓ s.5(2) states that any vacancy arising from any cause must be filled by council as soon as reasonably possible fro council to do so.
- ✓ s.7 states that the municipal board, subject to any enactment that limits its authority, has full management and control of the municipal library and shall, in accordance with the regulations, organize, promote and maintain comprehensive and efficient library services in the municipality and may cooperate with other boards and libraries in the provision of those services.
- ✓ s.8(1) states that the municipal board shall before December 1 in each year prepare a budget and an estimate of the money required during the ensuing year to operate and manage the municipal library.
- ✓ s.8(2) states that the budget and the estimate of money shall be forthwith submitted to the council of the municipality.

- ✓ s.8(3) states that Council may approve the estimate under subsection (1) in whole or in part.

- ✓ s.9 states that the municipal board shall keep accounts of its receipts, payments, credits and liabilities, have a person who is not a member of the municipal board and whose qualifications are satisfactory to council to review the accounts each calendar year and prepare a financial report in a form satisfactory to council and submit the financial report to council immediately after its completion.

- ✓ s.10(1) states that when money is required for the purpose of acquiring real property for the purposes of a building to be used as a municipal library or for erecting, repairing, furnishing and equipping a building to be used as a municipal library, the council may, at the request of the municipal board, take all necessary steps to furnish the money requested or the portion of it that the council considers expedient.

# POLICY LEG. 01
# VILLAGE OF RYCROFT
# RESPONSIBILITY OF COUNCILLORS APPOINTED TO COMMITTEES, BOARDS OR AUTHORITIES POLICY

| | |
|---|---|
| Department: Legislative Services | Date Approved: |
| Replaces/Rescinds: LEG. 06 February 2009 | Council Resolution Number: |

**PURPOSE:** To ensure Council as a whole are informed of Committee business.

**SCOPE AND POLICY:**

1. **Committee Responsibilities**

   1.1 Annually, at the Organizational Meeting, Councillors will be appointed to serve on various in house and external committees.

   1.2 Councillors serving on committees shall represent the interest of the whole Village and shall keep Council informed of committee business.

   1.3 Following the appointment of the Mayor, Councillor or member-at-large to a committee, board or authority the Chief Administrative Officer shall advise the committee, board, or authority of the appointment and the following:

   a) That the secretary to the committee, board, or authority shall forward to the Village of Rycroft a ratified copy of the minutes, of any board that holds meetings monthly within 15 days of each meeting or an ungratified copy of the minutes of any board with meetings not held monthly within 15 days of each meeting, along with the dates of any scheduled future meetings, and

   b) That where the Mayor or a Councillor is appointed to the committee, board or authority the Mayor or Councillor shall not be expected to act as advocate for the committee, and significant issues such as finding

requests and long term plans should be presented to the Village of Rycroft by the Chair, or their designate, of the committee, board or authority.

1.4 During the Council Committee Report portion of each regular Council meeting, Councillors shall verbally update Council as a whole on the business of any Committees.

1.5 ~~The Chief Administrative Officer shall maintain a register of committee, board or authority meetings, the members of Council and staff of Rycroft who attended, and where the appointed member of Council, was unable to attend. This register shall be available to each organizational meeting.~~ The Chief Administrative Officer shall also maintain a register of scheduled committee, board or authority meetings including the committee, board or authority name, date, time and location of meetings. This register of scheduled committee, board or authority meetings shall be available to all members of Council at each regular Council meeting. If an appointed Councillor is unable to attend a Committee meeting, they shall contact the alternate member to attend, thereby ensuring that the Village is represented at all meetings.

1.6 When an appointed Councillor feels that it would beneficial to the Village to have the alternate member attend a committee meeting, in conjunction with the appointed Councillor, the alternate member will be permitted to attend, subject to the approval of the Committee membership. The alternate committee member shall have no voting privilege, when the appointed Councillor is in attendance at a committee meeting.

~~2. Appointment of Mayor and Deputy Mayor~~

~~2.1 The Council, at its first meeting following the date of the general election, and annually thereafter, not later than two weeks after the third Monday in October, shall elect one of its members as Mayor and one of its members as Deputy Mayor.~~

~~2.2 When the Mayor, through illness, absence or other cause, is unable to perform the duties of this office, or when the office is vacant, the Deputy Mayor shall have all the powers and shall perform all the duties of the Mayor during the Mayor's inability or absence.~~

~~2.3 When both the Mayor and the Deputy Mayor, through illness, absence or other cause, are unable to perform the duties of the office, the Council may appoint a temporary Acting Mayor.~~

~~2.4 A Mayor and a Deputy Mayor who have been appointed to their offices by the Council may resign their positions while retaining their seats on the Council.~~

~~2.5 When the Office of Mayor or Deputy Mayor becomes vacant by death, resignation, forfeiture or otherwise, the Council shall forthwith elect one of the Councillors to fill the position for the remainder of the term of office.~~

## ~~3.~~2. Pecuniary Interest of Councillors

~~3.1~~2.1 The Councillors of the Village of Rycroft are governed by the Municipal Government Act with respect to pecuniary interest, and are responsible to familiarize themselves with the requirements of the Act in this regard.

~~3.2~~2.2 When a Councillor has a pecuniary interest in a matter before the Council, any committee of the Council or any board, commission, committee or agency to which the Councillor is appointed as a representative of the Council, the Councillor shall, if present;

a) Disclose the general nature of the pecuniary interest prior to any discussion of the matter;
b) Abstain from voting on any question relating to the matter,
c) Subject to subsection 4.4 below, abstain from any discussion of the matter, and
d) Subject to subsection 4.3 below, leave the room in which the meeting is held until the discussion and voting on the matter are concluded.

~~3.3~~2.3 If the matter with respect to which the Councillor has pecuniary interest is a payment of an account for which funds have previously been committed, it is not necessary for the Councillor to leave the room.

~~3.4~~2.4 If the matter with respect to which the Councillor has pecuniary interest is a question on which the Councillor as an elector or property owner has the right to be heard by the Council;

a) It is not necessary for the Councillor to leave the room; and
b) The Councillor may exercise the right to be heard in the same manner as a person who is not a member of the Council.

~~3.5~~2.5 If a Councillor is temporarily absent from a meeting when a matter in which the Councillor has a pecuniary interest is introduced the Councillor shall immediately on returning to the meeting, or as soon thereafter as the Councillor becomes aware that the matter has been considered, disclose the general nature of the Councillor's interest in the matter. The abstention of a Councillor for reason of pecuniary interest and the disclosure of a Councillor's interest shall be recorded in the minutes of the meeting.

## ~~4.~~3. General

~~4.1~~3.1 Every member of the /council shall make and subscribe an official oath before entering on the duties and shall deposit the oath with the Village Chief Administrative Officer.

~~4.2~~3.2 The Mayor and members of Council may be paid the remuneration, travel, subsistence and out of pocket expenses that may be set by the Council and outlined in Village policy LEG.04.

Mayor

Chief Administrative Officer

9.7

**Rycroft Finance**

**To:** Village of Rycroft
**Subject:** RE: Economic Disaster Resilience & Recovery Workshop

**From:** Carla Day <cday@saddlehills.ab.ca>
**Sent:** July-03-19 9:57 AM
**To:** Village of Rycroft <rycroft@rycroft.ca>
**Subject:** Economic Disaster Resilience & Recovery Workshop

Hello,
Saddle Hills County is hosting a one day workshop with the Economic Developers Alberta (EDA) on Economic Disaster Resilience & Recovery on July 22, 2019. We would like to extend an invitation for you and or your staff to join us for the workshop. I have attached the agenda for the day as well as the pamphlet from EDA for your information. If you could confirm your attendance with Carla Day at cday@saddlehills.ab.ca by July 15th so we can have enough manuals for everyone attending as well as for catering. Coffee and lunch will be supplied. I will confirm the venue after I receive the number of people attending.
Thank you and I look forward to hearing from you,

Confirmation of attendance acceptable July 17 by 9 AM. (confirmed Jul 4/19) JK

Carla Day
Community Development Coordinator
Saddle Hills County

Junction of Hwy 49 and Hwy 725
79177 Rge Rd 84
R.R. #1, Spirit River
AB, T0H 3G0
780-864-3760 ext. 206
www.saddlehills.ab.ca

***Safe Strong Sustainable***

*"This email and any attachments are confidential and intended solely for the use of the individual or entity to whom they are addressed. If you are not the named addressee or have received this communication in error, please notify the sender immediately by email, delete this email and any attachments from your system, and do not disseminate, distribute or copy this email and any attachments."*

EDA's Award Winning Course

# Book Your Workshop Now

**To Book Your Workshop:**
Economic Developers Alberta
Phone: 1-866-671-8182
Email: admin@edaalberta.ca

**Community Cost:**
1-Day Condensed Version $2500*
Plus: Trainer travel fees and hosting logistics (venue and food)

* Includes two trainers, course manuals, completion certificates

Ask about our special limited time pricing of $800/course.

# ARE YOU PREPARED?

How do you prepare your local economy for a disaster?

EDA's one-day workshop is guaranteed to help elected officials, economic development officers and other community leaders prepare for, and recover from a disaster.

EDA

INTERNATIONAL ECONOMIC DEVELOPMENT

# About EDA's Economic Disaster Resilience & Recovery Workshop

Disasters don't discriminate. Floods, fires and other natural disasters can happen without warning. Factory closures, cyber security breaches, and major industry shifts can also cause significant economic disruptions.

This one-day workshop delivers practical steps to help lessen damages to your local economy.

Our Economic Disaster Resilience & Recovery workshop provides you with:
- An introduction to community economic resilience
- Phases of a disaster in the context of economic recovery and development
- Government roles & responsibilities after a disaster
- Business assistance before and after a crisis
- Crisis communications
- Community recovery opportunities

**Who should attend?**

Economic Developers
Emergency Managers
Elected Officials
Chief Administrative Officers / City Managers
Chamber leaders and business support organizations
Urban Planners
Economic development committee members
Workforce and post-secondary organizations
Civic organizations
Other key community stakeholders that have a role to play in business and economic recovery

**Act Now**

Book our workshop today and take charge of your future. Help your community position itself to effectively respond to a disaster and shorten its recovery time.

# Course Trainers

**Leann Hackman-Carty, CEO, Economic Developers Alberta**

In 2014, Leann completed a project with 11 Alberta flood impacted communities. In 2016-17, she worked with the Fort McMurray region on business and economic recovery by setting up and operating the business hotline; validating businesses for Red Cross emergency relief; and leading a 10-member economic recovery assessment team to the region. In 2017 she updated the 'Recovery and Resiliency Roadmap: A Toolkit for Economic Preparedness (Canadian Version)' to help communities prepare for and recover from economic disruptions. She also brought this resiliency training program to Canada, and released her 'Master Your Disaster' series of guidebooks to help individuals, businesses and communities prepare for, respond to and recover from disasters. Leann is a 2018 recipient of Public Safety Canada's Emergency Management Exemplary Service Award-Resilient Communities.

**Natalie Gibson, Senior Economic Development Specialist**

As a certified marketing and economic development professional, Natalie has significant experience in economic and business development, and experience as a municipal politician. She works with entrepreneurs, economic development practitioners, and all levels of government focused on growing healthy communities. She delivers EDA's Community Economic Development Training Program, and was recognized as 2014's 'Economic Developer of the Year'. In 2013, she participated in EDA's Disaster Recovery Project, completing business walks and community assessments for flood impacted communities. In 2017, she volunteered as a member of EDA's technical team to Fort McMurray.

**Angela Groeneveld, Business and Economic Development Specialist**

Angela is passionate about seeing and seizing opportunities for entrepreneurs to increase their performance. Most recently she has contracted her services as a Business Development Specialist for the Town of High River. Previously she was the Town's Business Renewal Officer, overseeing Phase 1 & 2 recovery efforts and assisting local businesses to rebuild after the 2013 floods. In 2016, Angela helped create and implement the Wood Buffalo Business Recovery Hotline, and inform the region's Business and Economic Disaster Recovery Plan. In January 2017, she volunteered as a member of EDA's technical team to Fort McMurray.

*Local leaders in every community should take this course to support economic development, disaster resilience and economic recovery activities in their region. This specialized training reinforces the importance of community preparedness. Staff and elected officials alike will greatly benefit from the course.*

Mayor Maryann Chichak, Town of Whitecourt

INTERNATIONAL ECONOMIC DEVELOPMENT COUNCIL
*The Power of Knowledge and Leadership*

EDA Economic Developers Alberta

# Economic Disaster Resilience & Recovery Workshop
## Saddle Hills County, AB
## July 22, 2019

**Day 1**

8:30-9:00 **Registration**

9:00-9:45 a.m. **Welcome and Opening Remarks**

**Introduction to Community Resilience (Leann Hackman-Carty)**

*Description:* Recent disasters demonstrate why economic resilience efforts matter now more than ever to your communities. Natural, manmade and technological disasters pose specific challenges to economic development. This session will focus on understanding the difference between disasters and emergencies, common challenges disasters bring to a local community, and how to foster long term community resilience.

9:45–10:30 a.m. **Phases of a Disaster: In the context of economic recovery and development (Natalie Gibson)**

Description: Understand the four phases of the emergency management continuum in order to better organize and identify appropriate actions. This basic framework will help your community develop prevention and mitigation, preparedness, response and recovery plans and activities.

10:30-10:45 a.m. **Break**

10:45-11:30 a.m. **Government Roles & Responsibilities after a Disaster (Leann Hackman-Carty)**

*Description:* After any major crisis, federal assistance becomes a critical recovery resource for the community. Knowing how federal, provincial/territorial and local governments work together to maximize speed and efficiency of recovery efforts is key. This session provides an overview of Canada's Emergency Management Framework, information about how to declare a disaster, as well as the types of government assistance available in Canada.

11:30–12:15 p.m. **Business Assistance Before and After a Crisis (Natalie Gibson)**

*Description:* One in four businesses does not reopen after a disaster. In resilient communities, leaders encourage small businesses to engage in preparedness, and leadership has a plan for post-disaster assistance, including a business re-entry plan and specific business retention and expansion activities. Together, these strategies get local firms up and running more quickly after a disaster and increase their ability to survive in the long-term.

12:15–12:45 p.m. **Lunch** (we can work through lunch if people wish to do so)

12:45 – 1:30 p.m. **Crisis Communications (Leann Hackman-Carty)**

*Description:* Traditional channels of communication often fail during and after a crisis. The need to communicate effectively is critical. Leaders are called upon to deliver a unified response and dispel rumors that can crush the economy. This session will provide information on how you can create an effective communication plan, maintain open communication channels, provide timely information and dispel rumors, as well as some specific strategies to help support your local businesses and retain workers.

1:30– 2:15 p.m. **Community Recovery Opportunities (Natalie Gibson)**

*Description:* With crisis comes opportunity. While disasters can have significant negative impacts, the recovery process can also bring opportunities for a community to build back better, and become more resilient. This section will review the role of local government in recovery, ways to build back better, and identify specific economic diversification strategies that can be applied to help make your community more disaster resilient in the future.

2:15 - 4:00 p.m. **Group Discussion & Wrap-up (Leann & Natalie)**
Questions, Discussion, Sharing

## About the Trainers

### Leann Hackman-Carty, CEO, Economic Developers Alberta

Leann has been the CEO of Economic Developers Alberta since 2009. In 2014, Leann completed a project with 11 Alberta flood impacted communities. In 2016-17, she worked with the Fort McMurray region on business and economic recovery by setting up and operating the business hotline; validating businesses for Red Cross emergency relief; and leading a 10-member economic recovery assessment team to the region. In 2019 she updated the *Community Toolkit for Economic Recovery and Resiliency* (Canadian Version)' to help communities prepare for and recover from economic disruptions, and brought this resiliency training program to Canada in 2017.

In addition to her work at EDA, she heads up HackmanCarty and Associates, which is focused on community capacity building, resilience and recovery. At the end of December 2017, she released her "Master Your Disaster" series of guidebooks on Amazon designed to help individuals, businesses and communities prepare for, respond to, and recover from disasters. In 2018, she received Public Safety Canada's Emergency Management Exemplary Service Award-Resilient Communities.

In her capacity as the Canadian President of the Institute for Sustainable Development (www.isdus.org), she works with international experts on innovative long term community recovery and resiliency programs. In April 2019, she added the role a Managing Director (Canada) for Jobenomics (www.jobenomics.com) to address her ongoing desire to "create jobs for everyone" particularly in the wake of a disaster.

### Natalie Gibson, Senior Economic Development Specialist

Natalie Gibson, is President of InnoVisions and Associates. For more than 20 years Natalie has been inspiring community leaders towards positive change through her work in both the public and private sectors. Natalie is a dedicated problem solver who can identify, discuss and determine the best path forward in a myriad of situations on any scale. Her superior communications skills and clear focus allows her to work closely with clients to determine initial and long-term success using the most efficient and effective tools available.

As part of the Economic Developers Alberta (EDA) Natalie has worked on countless projects across Canada and the U.S. including her work with the EDA's Emergency Disaster Recovery Project during the Alberta Floods of 2013 and in 2017 following the Fort McMurray wildfire.

As a teacher and motivator, Natalie delivered one of Canada's first Community Economic Development Training Programs (CEDTP) through the EDA, inspiring hundreds of community representatives, elected officials and industry leaders. Natalie's ability to objectively assess an organization's advantages and faults allows her to uncover opportunities in business retention, expansion and investment, building wealth and boosting economies across the country.

Her leadership skills make Natalie a concise and inspiring public speaker, offering practical tools and advice on best business practices catered to each client she works with.

# Central Peace Fire & Rescue Commission

## *Manager/Fire Chief's Report*

I would like to thank all members of the Board here tonight for attending this meeting

Since our last meeting on April 4th, we've had viewed our Agenda items for information only as we had not met Quorum due to scheduling issues.

Our yearly call volume was 167 incident calls in 2018, which in turn was up by 7% from 2017. This year is starting of slower than the last few years regarding Incident call volume. In 2017 we had seen 44 incidents in the first quarter from January 1st, to March 31st. 2018 in the same time period we saw 43 incident calls. This year, to date, covering the second quarter we've had only 65 incident calls down 25 incident calls in the same period as last year. We've attended 29 Medical calls, 8 Motor Vehicle Incidents, 14 Fires, and 14 Monitored Alarms.

The training program is moving forward with practical evolutions enabling skills sign-offs for the firefighter competencies to the NFPA 1001 level 1 standards and are expecting 8 firefighters to complete their NFPA 1001 level 1 by the end of the summer if our stars align. We've put in place a training officer now to assist in completing the training program. The Medical First Responder training is ongoing, and the team meets on a regular basis, working on scenarios to enhance their skill level. The same is true for the Low/Steep angle rope team. This dedication still makes me very proud of our firefighters for all the programs we have offered them.

We've completed a 16-week regional recruitment program and celebrated the 6 recruits that graduated. Birch Hills County was an integral part of this program and brought our two departments closer together. It is my hope that next year's recruit program will have Saddle Hills County join us as well to make a true regional recruit program. I'm very happy with the program and how it evolved and how it will continue to evolve over the next few years.

We've completed a inter-agency emergency exercise involving a rescue scenario atop of the Richardson Pioneer Elevators on June 12th. The agencies that participated were Richardson Pioneer, Central Peace Fire and Rescue, County of Grande Prairie Fire Department High Angle Team, AHS EMS team, and RCMP.

The Central Peace Firefighters Association has been working hard. This year's planned golf tournament to help raise some funds for some new equipment, raised over $13,000.00 for its First Tournament. There are plans to make this an annual event.

With the Fires in High Level, Alberta Task Force 1 was deployed, I attended as the Resource Unit Leader for the team and was deployed a total of twelve days. Resources were enacted through the Province as well as the North West Mutual Aid Agreement.

*Points of Interest and Accomplishments since the last meeting:*

- We received the ACP Grant and have since had John McDonnell from Brownlee and Associates present to the Board of Directors.
- Completed the theory and practical evolutions for NFPA 1002 Driver Training as required by NFPA 1451 Sec. 5 – Driver Frequency.
- Received a donation from the former MD 133 Firefighters Society for MFR equipment.
- RFP for Firehall feasibility study posted on Alberta Purchasing Connection – received 5 bidders.
- Received ResQue tubes from CASA – Canadian Agriculture Safety Association
- Alberta Task Force 1 - Training Completed
- Basement Fire Lecture Course completed

*Recruitment:*

Regional recruitment was successful – 16 weeks with 6 graduates.

Plans for recruitment next November, with 5 on the waiting list for CPFR and 6 on the list for Birch Hills County.

*Equipment Purchases or repairs:*

- New (used) medium Rescue Truck purchased from Calgary Fire Department. Put in service March 18th
- CVIP Inspections completed for the Fleet
- Pump tests to begin Friday June 28th.

*Meetings:*

- CPREM Meeting – Table Top Exercise
- Trauma Drama meetings
- PRFCA Meeting – Fahler
- CPREM Meeting – Spirit River
- Richardson Pioneer Emergency exercise

*Summary:*

In summary, things are still moving at a very steady pace. We have a very busy schedule this summer with some great training coming up. The Board is welcome to come and observe our Live Fire Training in Wanham at the Live Fire Training Facility, date to be determined.

As our mutual aid partners work with us, we are developing a stronger network of firefighters as each training opportunity or incident passes. The past regional recruit program has further brought our fire departments closer, using trainers and officers from both departments. This in the long term will build a better fire department for all.

Members of the CPFR are doing great jobs in and out of the Communities, educating schools, attending as Designated Drivers for private events, as well as Medical First Responders at various events.

The Central Peace Firefighters Association is growing, and we now have people wanting to take the lead of some very important community involvement exercises and public events, and once again, bringing us to the next level of commitment for our fire department.

Thank you,

Brian Kroes

Manager/Fire Chief

Central Peace Fire & Rescue Commission

10.2

# CENTRAL PEACE MUNICIPALITIES (G5) MEETING

**TUESDAY, JUNE 25, 2019**
**Hosted by the Village of Rycroft**
**Rycroft Community Hall at 5208 47 Avenue, Rycroft**
**Doors open at 5:00 p.m. Dinner at 5:30 p.m.**

## MEETING NOTES

| | | |
|---|---|---|
| **PRESENT:** | **Saddle Hills County** | |
| | Alvin Hubert | Reeve |
| | Lawrence Andruchiw | Councillor |
| | Ed Armagost | Councillor |
| | Willis Fitzsimmons | Councillor |
| | John Moen | Councillor |
| | Ken Titford | Councillor |
| | Joulia Whittleton | Chief Administrative Officer |
| | Chase Coli | Municipal Intern |
| | **Birch Hills County** | |
| | Gerald Manzulenko | Reeve |
| | Albert Poetker | Councillor |
| | Mel Duvall | Councillor |
| | Denise Joudrey | Councillor |
| | Hermann Minderlein | Chief Administrative Officer |
| | **MD of Spirit River** | |
| | Tony van Rootselaar | Reeve |
| | Stan Bzowy | Deputy Reeve |
| | Elaine Garrow | Councillor |
| | Kelly Hudson | Chief Administrative Officer |
| | **Town of Spirit River** | |
| | Allan Georget | Mayor |
| | Denise Skoworodko | Councillor |
| | Brenda Stanich | Councillor |
| | Herman Sellin | Councillor |
| | Tammy Yaremko | Councillor |
| | Harry Ezio | Councillor |
| | Bobby-Jo Dwernychuk | Councillor |
| | Dee Deveau | Chief Administrative Officer |
| | **Village of Rycroft** | |
| | Joanne Chelick | Councillor |
| | Roxann Dreger | Councillor |
| | Peter Thomas (Recorder) | Chief Administrative Officer |

1. Chair Roxann Dreger called the meeting to order at 6:15 p.m.
   Introductions were made. Joining the meeting was new RCMP Sergeant Bryce Tarzwell.

2. **Adoption of Agenda**
   **ADD:** 10. Central Peace Attraction and Committee Update (TSR)
   The agenda was adopted by consensus.

3. **Delegation – Fairview Fine Arts Center**
   Donna Seller (President), and Doreen Verschoor (Coordinator Artist in School program) gave an overview of the programs and operations at the Fine Arts Centre in the Town of Fairview. They are requesting funding in the amount of $10,000 for each of the next 3 years to support their regional program.
   Currently the Town of Fairview provides $1,800 every three months, and the MD of Fairview provides a $2,500 youth program grant.

   The new RCMP Sergeant Bryce Tarzwell introduced himself to the group. He did spend 6 years in Spirit River previously as a member, and has returned to the detachment as Sergeant. He then left the meeting at 6:30 p.m.

4. **Adoption of Previous Meeting Minutes from December 11, 2018**
   Richard Moravec and Brodie Wells names were noted as spelling errors in the minutes, and corrected.
   The minutes from the December 11, 2018 G5 meeting held at the Rycroft Ag Centre were adopted as amended, by consensus.

5. **Previous meeting Action Items Updates**
   Hermann Minderlein noted that the CAOs did review the Intermunicipal Subdivision and Development Appeal Board bylaw and agreement, and that the Bylaw should be adopted at upcoming meetings where they are not already adopted, and that Birch Hills County will prepare sufficient copies of the agreement to allow it to be signed, sealed, and distributed once signed off on by all of us.
   **ACTION:** CAOs to proceed with Council approvals for the Intermunicipal Subdivision and Development Appeal Board bylaw and agreement, and forward to BHC.

6. **Central Peace Regional Water - Governance structure study (proposed) (SHC)**
   Saddle Hills County asked if the G5 would be agreeable to submitting an Alberta Community Partnership Grant to hire a consultant to determine what the governance model should be for the future joint water utility.
   **ACTION:** CAOs to follow up and determine who has the ACP availability, and capacity to take the lead.

7. **Central Peace Seniors' Housing - project update (SHC and MDSR)**
Saddle Hills County provided an update to the project. All 5 municipalities indicated that they have passed the three motions approving the cost sharing, land transfer, and making the MD of Spirit River the managing partner.
There is a meeting with Minister on July 24 to get an update on the project.
There is $60K left over in the ACP grant that we hope to apply to the architectural design for the project in partnership with Grande Spirit Foundation.
Saddle Hills County would like to move forward and put out a press release as an update.
**ACTION:** SHC to proceed with Press Release promoting the project.

8. **Helipad at the Hospital (TSR)**
The Town of Spirit River asked if there was any support for a Helipad at the hospital. It was noted that this would need Alberta Health Services approval first. Mayor Georget will get the AHS contacts and proceed to collect more information.

9. **Emergency Ultrasound Machine (TSR)**
Contributions to the Ultrasound Machine were noted as MDSR $10,000; SHC $30,000; VOR $2,000; BHC and TSR nothing at this time.

10. **G5 Committee Updates:**
    - Central Peace Economic Development Advisory Committee (SHC)

    CAOs are compiling their Economic Development plans and tools and submitting them to review at next meeting in November.

    - Central Peace Assessment Review Board (SHC)

    Clerks met and agreed on forms and process.

    - Central Peace Subdivision and Development Appeal Board (BHC)

    CAOs to proceed with getting agreement and bylaw approval from Councils

    - Central Peace Medical Health Center (MDSR)

    ATCO completed gas line upgrade June 17. The sidewalk is to be poured first week of July. The parking lot paving is to be complete by end of July. Telehealth is setting up a wireless connection from hospital before end of July. A new AED machine was donated and is now available in the common area. The generator will be in place and functional in July. New doctor is in the building and there is a positive cash flow projected for 2019.

- Central Peace Attraction and Retention Committee (TSR)

There is a BBQ to welcome the new Doctor Wolfhaardt Thursday July 27 at 5:30 p.m.in the Brownlee Building.

11. **Next Meeting Date:** TENTATIVE December 10, 2019. Birch Hills County

12. **Adjournment** at 7:35 p.m.

10.3

Water North Coalition

**Water North Coalition**
206-9621-96 Avenue, Bag 900-14
Peace River AB T8S 1T4
**Phone:** 780.624.6274 | **Fax:** 780.624.6184

June 28, 2019

Diahann Potrebenko
Mayor, Village of Rycroft
diahann.potrebenko@rycroft.ca

Dear Ms. Potrebenko,

As we are at the end of the first year of our second strategic term with the Water North Coalition (WNC), we are reaching out to our members to ensure that our efforts to keep members engaged are effective.

The WNC is a group of northern Alberta communities and water and wastewater professionals that meet quarterly across northern Alberta to advance solutions to water and wastewater challenges. Our brochure and most recent progress report is attached for more information. You can also find more information here: Water North Coalition

We have noticed that a representative from the Village of Rycroft has not attended a Water North Coalition meeting for some time. We currently have Councillor Roxann Dreger listed as the appointed member from the Village of Rycroft. We would like to confirm that this information is correct, and if we can clarify any questions or concerns you may have.

Our next meeting is scheduled for July 25, 2019 in Kakut Lake, AB, hosted by Birch Hills County. Your attendance and participation are important in advancing the work of the coalition to develop "made in the north" solutions to water and wastewater challenges in northern Alberta. We would love to see a representative from the Village of Rycroft there.

If you wish to learn more about the Coalition supporting the water and wastewater needs of your region or to attend the next meeting, please contact Melonie Doucette, Senior Northern Development Officer with the Northern Alberta Development Council, melonie.doucette@gov.ab.ca or call 780-743-7147 (for toll-free, first dial 310-0000).

***Central Peace***
***Regional Emergency Management Committee***
***Meeting Agenda***

Thursday July 18, 2019
Birch Hills County

Supper: 6:00 p.m.
Meeting to follow

1. **Introductions**

2. **Minutes**
   - Minutes of March 7, 2019

3. **Administration**
   - Regional Emergency Management Bylaw(s) Update:
     - Amendments to meet requirements of LAEMR
   - Website:
     - Saddle Hills County Website project

4. **Training**
   - Course Worksheets
   - Upcoming Training
   - Needs

5. **Regional Exercise**
   - EMPP Grant Application - 2020 Regional Exercise

6. **Preparedness**
   - 2019 Emergency Plan Update
   - Central EOC – Brownlee Building

7. **Mutual Aid**
   - NW-IMT (EOC Support Team)

8. **Mitigation Programs**
   - FRIAA
     - Saddle Hills County – Wildfire Risk Hazard Assessment
     - Fall 2019 – Birch Hills County
     - January 2020- MD-133
   - Flood Mitigation Grant (MD-133/Rycroft)
   - Other

9. **Response**
   - Wildfire GCU-001 Fourth Creek
   - Chuckegg Creek Fire – High Level (NW-AHIMT)

   (Changes in fire behavior due to forest health and increased fuel build up)

10. **Recovery**
    - 2018 Disaster Recovery Program
      (Status of repairs)

11. **Partner Agency Updates**
    - Alberta Emergency Management Agency
    - Agriculture & Forestry
    - Alberta Health Services
    - Alberta Support & Emergency Response Team
    - Alberta Energy Regulator - FIRST
    - AHS/EMS
    - RCMP
    - Alberta Transportation

12. **Round Table**

**Next Meeting:**

Oct/Nov , 2019
Location: Saddle Hills County

Supper at 6:00 p.m.
Meeting to follow

# Friends of the Rycroft Hall

Meeting Minutes

June 19th 2017

**Opening**
The regular meeting of the Friends of the Rycroft hall was called to order at *7:08* on June 19th 2019 in the meeting room.

**Present**
*Bill milkovich, James carlson, Rochelle dufour, Carrie Jackson, Amy Rowlens ,Rachel Piscopo, Barb delay, Angela Dufour, Monique Hendry*

**Approval of Agenda**
Rochelle moved the minutes and James second it.

**Approval of Minutes**
The minutes of the previous meeting were read by monique.

**Open Issues**
Bank Balance =

June 30th =be there for 7 pm begins at 8 until 9ish fireworks are at 11:00pm hot dogs and burgers and drinks. (BBQ by Donation) – Rochelle arranged to use the Fire department BBQ, we just need to provide our own propane.( James said he had a cpl we could use.) Ange is going to pick up food . time: 7pm -8-9
volunteer cooks = Rochelle, Monique, Amy, Melissa, James, barb will be more than willing to help if she is around. Rachelle has already got application to alberta health services.

Canada Day – spending $150.00 on decorations.

Pancake breakfast(By Donation)-8:00-9:00-11:00 ( we will gather together on the 30th to prep sausages and decorate the hall for the 1st ) we will take orders for toonie poutine in the morning until 1:30 and pre order. ( pancakes and sausages,drinks. – the village is donating the food and moe brought 4 boxes of pancake mix and 4 syrup bottles.)
Cooks – Fire department, Ken , Rochelle
Setup and take down – Ange, Moe, Rochelle
Door greeter – Bill

Bike parade –11:30- Fire department will judge the bikes ! Amy will pass out toonies and 1st prizes after parade is over. We all agreed on a route for the parade as well !!! ( we will start at the fire department and finish at the hall!) map will be printed and see if public works will help barricade the streets. ! 1st prize was Donated by Amy and her Family.

Carnival- 1:00-3:00 - 5 Prizes to be won ! ($5.00 a ticket each ticket has 6 carnival games to play and receive a stamp once completed add name and phone number and choose the prize you would like to win. ) we will also have photo booth and face painter. Canteen will be open. Gave Amy the prizes donated from Ron at tags to make up basket prizes fields will donate the other 3 baskets.
Canteen – Rachelle, Amy
Games – Knock down – Melissa ( 6 soup cans with a canadian label and a small ball)
_ Hockey table – Rochelle ( rochelle's got it all figured out )
_ Tattoo station- Sam ( tatoos and water and cpl sponges)
_ Pong – Mya ( clear cups, water, ping pong balls,small canadian leaf toys to sink.
_ Sand Art – Monty ( Red and White sand and canadian flag printouts, clear glue)
_ Fish Pond - ( rochelle has already brought in the fishes and fishing poles)
_Photos – Ange $ ( rob is fixing up the photo props in basement and rochelle made some photo props as well)
_Face painter - Meghan

Talent show 3:30 - 5:30
MC- Brian the Fire chief.
Judges Amy , Julia, Monty
_will do a sound check on the night of the dance on the 28th.
_ Prizes - 3x 50.00 gift card
_Ange will make an email for registering and other future events for our committee.
_( we will have a dance if the Talent show is a flop or even 20 min long)

* keep the money seperate from door and canteen ect … keep track of how many people and what we sell for future refference.

monique will call grande prairie north horizon to set up new board members on charge account with co op .

Applying for grant from saddle hills – sent out letters have not gotten anything back yet , Ange kind of got word to re do application. So Ange is working on that and should have done tomorrow.

Rochelle motioned to do e transfers with our banking and Barb second it all in favor.

Beach Dance June 28th 7-10pm ( Moe , Ange, James, Rochelle ) set up table at the front door so we can supervise who is coming and going.

**Agenda for Next Meeting**

Canada day turn out, beach dance turn out, bank balance, dance theme idea, future fundraising ideas

**Adjournment**

Meeting was adjourned at *8:46pm* by Ange. The next general meeting will be at *7:00pm* on *July 17th*, in *the meeting room*

Minutes submitted by: *Monique Hendry*

Approved by: *Name*